Finite Element Analysis of Hydraulic Press Machine

Umesh S Badakundri
PG Student,
M.Tech (Machine Design),
Mechanical Engineering, KLS Gogte Institute of Technology, Belgaum, India
umeshbadakundri@gmail.com

Santosh Kullur
PG Student,
M.Tech (Machine Design),
Mechanical Engineering,
Basaveshwar Engineering College, Bagalkot, India
santosh.kullur@gmail.com

Prof. A.A.Kulkarni
Professor,
Mechanical Engineering, KLS Gogte Institute of Technology, Belgaum, India

ABSTRACT - The main aim of this study is to reduce the cost of the Hydraulic presses without compromising on the output quality. By using prime resources in designing hydraulic press can influence cost reduction factor of hydraulic presses. One way of doing it is, by optimizing the volume of material utilized for building the body. An attempt has been made in this direction to reduce the volume of material. So this paper consider an industrial application project consisting of mass minimization of a workshop type hydraulic press. This workshop type hydraulic press has to compensate the forces acting on the working plates and has to satisfy certain critical constraints. Major parts of the hydraulic press machine are analyzed for stresses and deformation by both theoretically and by finite element software. ANSYS has been used for this analysis which uses finite element method for solution. These stresses are compared to Yield stress and considering minimum Factor of safety of 2.

Keywords: **Hydraulic press, Optimization, Analysis, Finite element, ANSYS.**

*****

I. INTRODUCTION

Press work is the most widespread among all the devices of forming metals and even some non-metals. In view of the great importance of the press proper design of these machines, in order to increase their performance and productivity, is considered very essential. The performance of a hydraulic press depends, largely, upon the behavior of its structure during operation. Press design methods have changed within a short span of time from empiricism to rational design methods; with the advent and widespread use of digital computers, it has now become feasible to develop analytical models and computer programs to apply numerical techniques with varying degrees of approximations to the design problems. The research on machine tool structures was stepped up by the application of the finite element method (FEM).

This is a more generalized method in which a continuum is hypothetically divided into a number of elements interconnected at nodal points to calculate the strain, displacement and stress. The FEM is preferred because it permits a much closer topological resemblance between the model and the actual machine. It has been only recently employed for press structures.

The ANSYS Finite Element software system is used as a tool to establish the theoretically predicted numerical model. This model has been discussed with different factors. The factors considered are: the boundary condition; the mesh density and the type of the element being used.

II. OBJECTIVES

1. Detailed drawing of machine
2. Modeling of the machine components in ANSYS.
3. Analysis of model using ANSYS.
4. Interpretation, Suggestion & optimization.

1st stage: - The dimensions of the machine are finalized. These dimensions have been used to model the machine in ANSYS.

2nd stage: - Taking the dimensions from the AutoCAD model the machine is modeled in ANSYS.

3rd stage: - Structural analysis

4th stage: - The results obtained from the analysis are interpreted & checked for their validity and material optimization is carried out.

III. METHODOLOGY

The main need is the cost reduction by reducing material in the hydraulic press machine. Saving of the material is very important in their future projects. Design upgrading is also their need to meet global competition. Our work is to analyze the need of the company. We are analyzing major parts of the hydraulic press.

The project needs reduction in thickness of the hydraulic press frame. The thickness of the frame is 5.4mm. We have analyzed that whether it is possible to reduce the thickness of the frame or not.

IV. DESIGN:

A. 2D DRAWING:

The following figure shows the 2D drawing of hydraulic press machine, and table is various components.

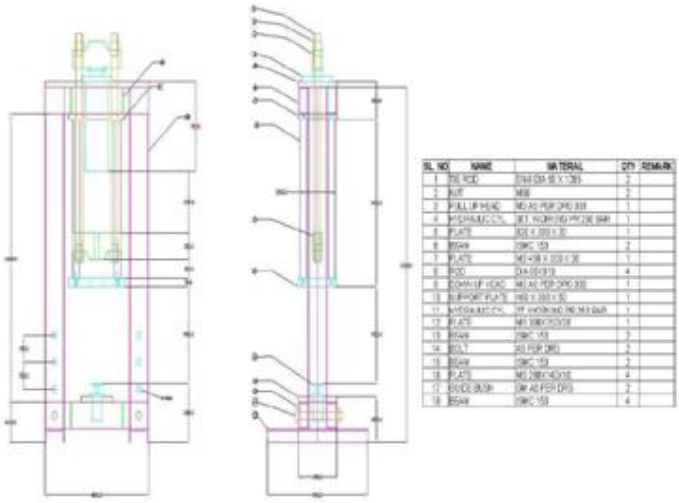

Fig.1 2D drawing of the hydraulic press machine

Specifications of the machine

1. Material used for manufacturing the machine: Mild steel
2. Carbon content of the mild steel: 0.40
3. Density : 7801Kg/m^3
4. Ultimate tensile strength of the mild steel:650 N/mm^2
5. Young's modulus:2X10^5 N/mm^2
6. Poisson's ratio:0.3
7. Coefficient of thermal expansion:12 x10^{-6}/^{0}C
8. Thermal conductivity:43.3 W/m-K
9. Operating temperature:30-80^{0}C
10. Load acting on the machine: 30tons
11. Yield strength : 250 N/mm^2

B. *DESIGN OF HYDRAULIC PRESS MACHINE*

1) DESIGN OF FOUR TIE ROD ASSEMBLY:

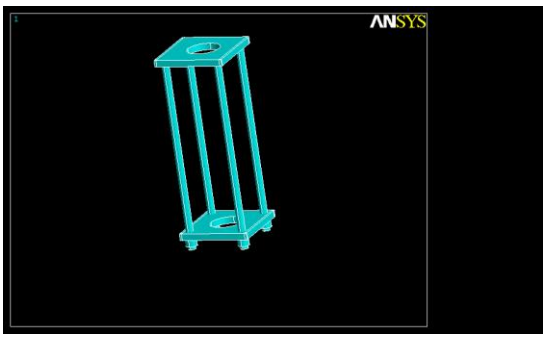

Fig 2 3D model of four tie rod assembly

The total load acting on the tie rod assembly is 30 tones. The tie rods are fixed at all four edges of the plate and the load is acting at the Centre of the lower plate. The upper plate is fixed to the frame. The upper plate also holds the hydraulic cylinder. Since the tie rods are equally spaced on the plate the load acting will be distributed equally to all four tie rod. The tie rods are fixed at both sides hence the loading is compressive in nature.

Results obtained:-

1. Since the load acting on each tie rod i.e 7.5 Tone is very less than the critical load for buckling i.e 41.03 Tonne, the tie rods will not buckle under given loading condition.

2. The induced stress by Rankin's formula in tie rods is 38.30 N/mm^2.Since,σ_i< Maximum working stress i.e 125 N/mm^2, design is safe.

2) LOWER PLATE

The lower plate supports all four tie rods which are fixed at its four edges and the load of 30 Tone acts at the center of the plate.

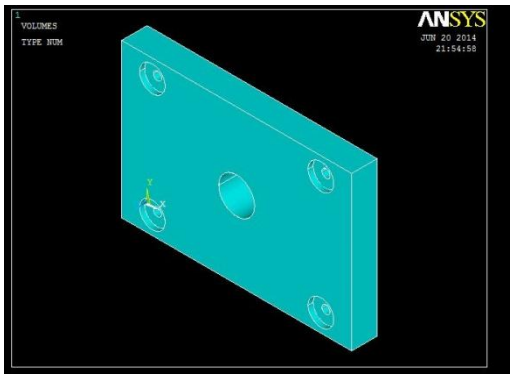

Fig 3 3D model of the lower support plate

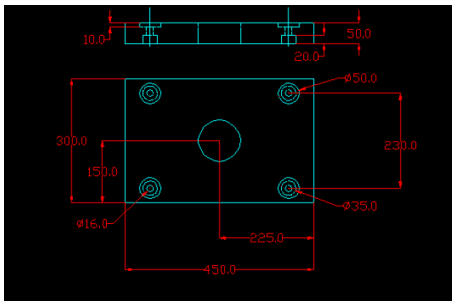

Fig 4 2D drawing of lower support plate

Assuming the plate is clamped at all four edges and concentrated load acting at the Centre. Since the hole at the Centre is very small as compared to the rest of the dimensions it is neglected for the analysis. The hole will not have much of an impact in the analysis. 2D diagram is shown in the fig 4

Results obtained:-
Deflection at the Centre is 0.07729.

1. Maximum stress induced is 114 N/mm^2.

   Since,σ_i< Maximum working stress i.e 125 N/mm^2, design is safe.

3) DESIGN OF TWO TIE ROD ASSEMBLY

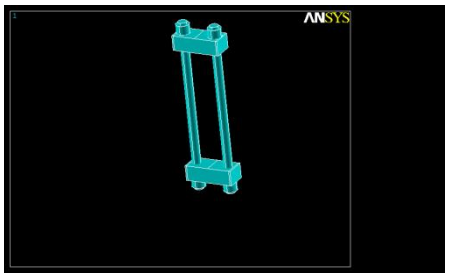

Fig 5 3D model of two tie rod assembly

Two tie rod assemblies consist of two tie rods, upper head and lower head. Both tie rods are fixed to upper and lower head and the load acts at the Centre of both upper and lower head. Since the upper head is pushed upwards by the ram of hydraulic cylinder placed below it and the lower head pulls the spindle connected between the lower head and the lower head, the tie rods connected to the heads faces tensile force.

4) UPPER HEAD
Since both heads are of similar geometry we analyze only the upper head. The geometry is simple rectangular block with holes at the ends to hold the tie rods. In analysis we neglect the holes since they are very small in diameter compared to the other dimensions.

Results obtained:-
1. Maximum deflection of the plate is at the Centre and its value is 0.0148 mm.
2. The bending stress induced in the head is 19.62 N/mm^2.

   Since,σ_i< Maximum working stress i.e 125 N/mm^2, design is safe.

5) UPPER HEAD
The tie rods are subjected to tensile load. The total load is equally distributed to both the tie rods.

Results obtained:-
1. Maximum stress induced in each tie rod is 74.94 N/mm^2
   Since,σ_i< Maximum working stress i.e 125 N/mm^2, design is safe.

6) FRAME
Here analysis done only for the vertical frame section. The frame is made up of two C section bars welded together there by forming a hollow rectangular tube of thickness 5.4 mm.

Fig 6 3D model of complete frame of hydraulic press machine

Total load acting on the vertical frame is 1.5 Tone. This includes the weight of four tie rod assembly, two tie rod assembly, cylinder and ram. The analysis is done only for one column considering the loading pattern and geometry of both columns of frame is same. Since the frame acts as a column analysis for buckling has to be done. 2D cross sectional view of the two welded C frame column is shown in fig 7.

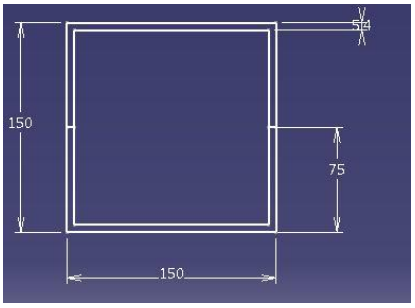

Fig 7 Cross sectional dimension of two welded C frame columns

Results obtained:-
1. Since the load acting on each column i.e 0.75 Tone is very less than the critical load for buckling i.e 71.73 Tone, the columns will not buckle under given loading condition.

2. The induced stress by Rankin's formula in tie rods is 2.35 N/mm^2.

Since, σ_i< Maximum working stress i.e 125 N/mm^2, design is safe.

V. ANALYSIS:

A MATERIAL PROPERTY:

Table I
Material Properties

S. No	Material Name	Modulus of Elasticity In Mpa	Density In Kg/mm^3	Poisson's Ratio	Yield Strength In Mpa	Ultimate Strength In Mpa
1	Mild Steel	200	7.801 E-09	0.3	250	650

The material property is same for all the components of the machine as shown in table I.

1) TIE RODS

A. MESHING

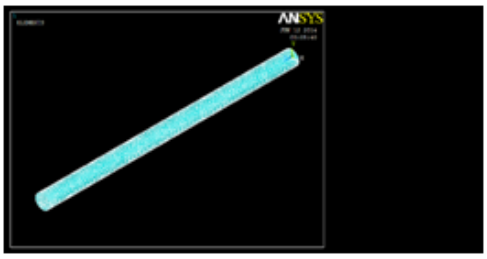

Fig 8 Meshed view of tie rod

Element used is solid45 element(8 node with 3 DOF/ node) to mesh the model of the tie rods. Analysis is done for only one tie rod assuming that equal load acting on each tie rod. The tie rods are fixed in all DOF at both the ends. As the load is distributed on each tie rod a total load of 7.5 tone is applied on each tie rod from the bottom side. The load is compressive in nature.

B. ANSYS RESULTS

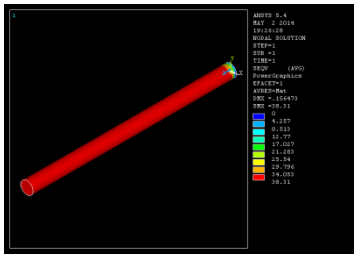

Fig 9 ANSYS results for maximum stress and deflection for tie rod

Result obtained:-The Maximum stress induced in the tie rod= 38.31 N/mm^2

2) LOWER SUPPORT PLATE

A. MESHING

The model consists of a plate with hole in the center. Similar to the tie rods here the element used is solid45 element(8 node with 3 DOF/ node) to mesh and the meshing is free meshing.

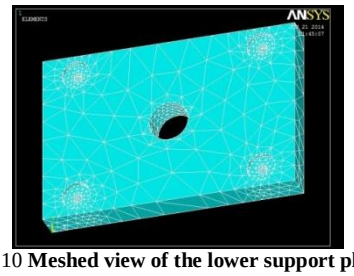

Fig 10 **Meshed view of the lower support plate**

B. CONDITIONS AND LOADS

The plate is clamped at all four edges hence it's fixed in all DOF at all four edges and the load of 30 tone is applied at the center of the plate.

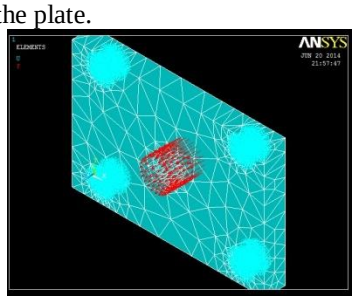

Fig 11ANSYS boundary conditions and loads

C ANSYS RESULTS

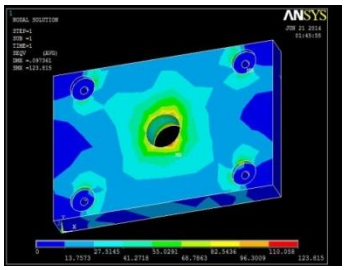

Fig 12 ANSYS result for maximum stress and maximum deflection

Results obtained:-

- The maximum stress in the lower support plate = 123.815 N/mm^2
- The maximum deflection in the lower support plate = 0.0973 mm

3 UPPER HEAD

The model consists of just an upper head. The holes made for two tie rods and ram is neglected to avoid complexity due to meshing.

A. MESHING AND BOUNDARY CONDITION

Element used solid45 element(8 nodes with 3 DOF/ node) to mesh the upper head. The head is fixed in all DOF at both ends near the region where tie rods are fixed. The load of 30 tone is applied at the center.

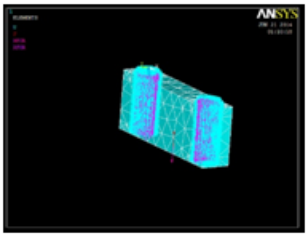

Fig13 Meshing and boundary condition view of upper head

B. ANSYS RESULTS

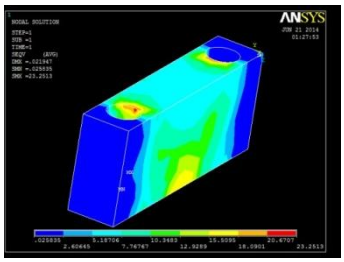

FIG 14 ANSYS result for maximum stress for upper head

Results obtained:-

- Maximum stress in the upper head = 23.25 N/mm^2
- Maximum deflection in the upper head = 0.021 mm.

4 TIE RODS

Modeling consists of a single tie rod. Model is made in ANSYS software Element used is solid45 element(8 node with 3 DOF/ node) to mesh the tie rod. The tie rod is fixed in all DOF at both ends and the tensile load of 15 tone is applied.

A. MESHING

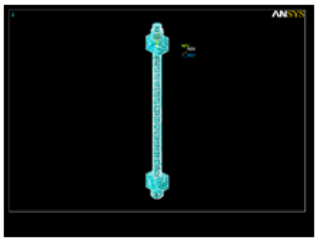

Fig 15 Meshed view of the tie rod

B. ANSYS RESULTS

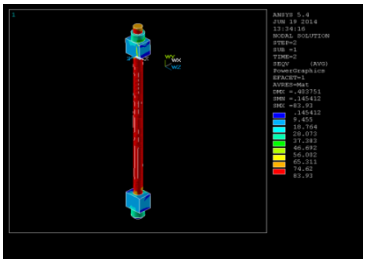

Fig 16 ANSYS results for maximum stress and deflection for tie rod

Results obtained:-

- Maximum stress in the tie rod = 83.93 N/mm^2

5) FRAME

Elements used are SOLID45 Element(8 nodes with 3 DOF/ node) to mesh the frame. The hollow tube is fixed at bottom frame and load is applied from the top. The loading is compressive in nature. The total load acting on the frame is 1.5 tone which includes the weight of two tie rod assembly, four tie rod assembly, cylinder and ram.

A. MESHING AND BOUNDARY CONDITION

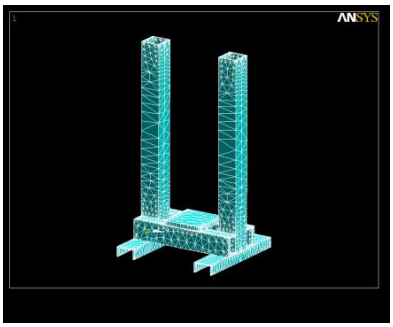

Fig 17 Meshed view of the frame model

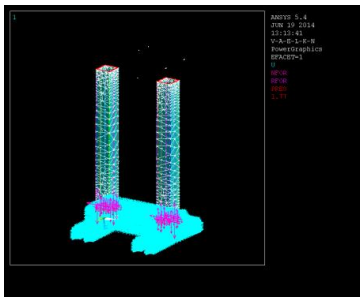

Fig 18 Boundary conditions for frame

B. ANSYS RESULTS

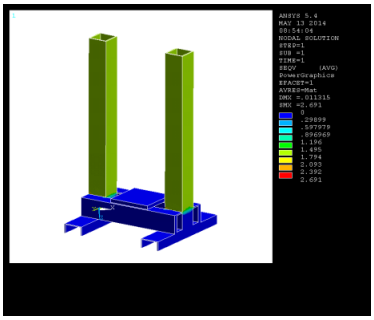

Fig 19 ANSYS results for maximum stress and deflection for the frame

Results obtained:-

- Maximum stress in the frame = 2.69 N/mm^2

VI. RESULTS AND DISCUSSION :

The following results have been obtained by ANSYS and theoretical calculations for different parts and the results are compared.

Component	ANSYS results		Theoretical results	
	Maximum stress in N/mm^2	Maximum deflection in mm	Maximum stress in N/mm^2	Maximum deflection in mm
Four tie rods	38.31	*	38.30	*
Support plate	123.875	0.0973	114	0.07729
Upper head	23.25	0.021	19.62	0.0148
Two tie rods	83.93	*	75	*
Frame	2.69	*	2.35	*

Table 2 Stress and deflection results

.

*Since four tie rods and frame is acting as a column with both sides fixed in the machine, buckling analysis is done. In these components linear deflection is very small and hence neglected. Since all the stresses induced are well below the yielding stress of the material. The material is safe.The table below shows the buckling results for tie rod and frame

Component	Critical buckling load in Tone	Load acting on the component in Tone
Tie rods in compression	41.03	7.5
Frame	71.73	0.75

Table.3 Buckling results

Since the actual loads acting on these components is very less than the critical loads, these components will not buckle.From the table 9.1 we see that the deflections for the support plate and the upper head are very less, even less than 0.01 mm, hence such a small deflection in a this machine is negligible. Therefore the percentage of error is calculated for the maximum stress induced, after comparing both theoretical and ANSYS results.The percentage error in the analysis of different machine parts is as follows.

Component	ANSYS results	Theoretical results	Percentage error
	Maximum stress in N/mm^2	Maximum stress in N/mm^2	
Four tie rods	38.31	38.30	0.01 %
Support plate	123.875	114	8 %
Upper head	23.25	19.62	15 %
Two tie rods	83.93	75	10%
Frame	2.69	2.35	12 %

Table. 4 percentage error for stress analysis

VII. CONCLUSION:

1. An attempt was made to analyze and optimize the 30tonne hydraulic press machine using ANSYS software. The project work carried out is successfully designed to meet the requirements as per the constraints.
2. The values of stresses obtained by ANSYS software conforming to the values obtained theoretically within 15 % of error.
3. The buckling analysis is done for the tie rods in compression and the frame. The critical load in both the cases is much less than the actual load acting on these components, hence buckling will not occur.
4. Weight optimization is done for frame and upper head. The thickness of the frame is reduced from 5.4 to 4 mm and the breadth and width are reduced to half. From results we can say that as the thickness is reduced the maximum stress in the frame is increased but still it is well below the yield stress of the mild steel.
5. The thickness of the frame could have been further reduced but aesthetics of the machine is also taken into consideration. The geometry of the pull up head i.e the upper head is modified to save material.
6. Analysis showing that the stresses are well below the yield stress and hence it is safe.
7. The total percentage reduction of weight in frame is 64 % and of both heads is 21 %. The weight of the frame is drastically reduced.

REFERENCE:

[1] S.P. Sinha and P. D. Murarka, computer-aided design of hydraulic press structures, math1 compute. Modeling, vol. 10, no. 9, pp. 637-645, 1988.

[2] Mohamad M. Saleh, design study of a heavy duty hydraulic machine using finite element techniques, Dublin city university, august 1992

[3] Malachy Sumaila and AkiiOkonigbonAkaehomenIbhadode, Design and Manufacture of a 30-ton Hydraulic Press, 196-200 , Jan. 2011

[4] Muni Prabaharan and V.Amarnath, Structural Optimization of 5Ton Hydraulic Press and Scrap Baling Press for Cost Reduction by Topology, international Journal of Modeling and Optimization, Vol. 1, No. 3, August 2011

[5] A. G. Naik and N. K. Mandavgade, FEA implemention in analysis and optimization of top and bottom frame for hydraulic cotton lint bailing press, international journal of scientific & engineering research volume 3, issue 7, july-2012 ,ISSN 2229-5518

[6] H.N.Chauhan and M.P.Bambhania, design & analysis of frame of 63 ton power press machine by using finite element method, volume 3,issue 7 , july 2013, issn - 2249-555x