Experimental Analysis of Fork type Semi-Automated Weeding Machine in Paddy Field

K Sripriyan
PSG College of Technology,
Coimbatore- 641 004, Tamilnadu, India
k.sripriyan@yahoo.com

K Anantharuban
Tata Beverages Ltd,
Munnar – 685 612, kerala, india
Karsri54@gmail.com

Abstract:

Purpose: This paper describes to remove the unwanted tiny plants, which grow along with paddy crops and also investigate the optimized design parameter to maximize the performance of the machine.

Methodology/ Approach: India has the largest paddy output in the world and is also the fourth largest exporter of rice in the world. The research deals with to reduce the human transformation in paddy field. In this end, new attempt has made for paddy field to remove unwanted tiny plants, which grow along with paddy crops and which eats the strength of the paddy crops. This small plant in chine help to removes the unwanted small plants in the paddy fields. It makes the roots of the crops health, on account of this the paddy crops grow healthy which results in higher yield returns to the formers.

***Significa*tion:** The main signification of fork machine is light weight, low ground pressure and reliable to clean the paddy field with 150mm of depth for better removal, the cultivator has arranged alternatively with uniform discharge and special wheels also used. It is easy to maintain with outer assembling of machine and it is convenient to use all kind of peoples. It is suitable harvesting in small field of horizontal land for it is small turning radium and flexible operation.

Key Words: *Cultivator (Weeding tool), Battery, V-belt and pulley, High torque DC motor, Cage wheel etc….*

*****

I. INTRODUCTION

In traditional weeding method the labours are used to cut the unwanted plants by hands, or to remove the same by using sharp objects and leave inside the land for natural mine after decay. It involves high labour cost and it leads to scarcity of labours at lower cost [1]. Later the farm holder's came up with a small machine for weeding without large number of labours. Initially it was used in paddy fields, namely conoweeder and rotary weeder. In this, the operators handle to guide the machine in to and fro motion. It includes time consumption and work load. Then to reduce the work load, engine powered weeding machines are introduced. Normally it is called as tiller. That machine was larger in size, heavy weight and it is operated by using petrol or diesel engine. Every farmers have not own this. They have to hire for this because of high capital cost [3]. Both machines have to be operated by farmers continuously. They have to run those machines in between the standing crops, with the guidance of the operator in tiller presence of engine causes air and noise pollution. Because of presence of gear transmission system skilled labours are required to operate the tiller. Size of the cultivator size is too large. So, it can be used only in wide size ridges. This paper highlights the investigation carried out to discover weeding machine with optimal design parameter has been followed. At this end, machine performance has been investigated.

A. Objective

Main objective of this paper is to

- Remove the weeds grown in between two standing crops without involving manual labour for weeding process
- Reduce the labour cost and time taken for weeding, without any damage to the crops

II. METHODOLOGY

A. Working Field

The field will be sown with crops in a straight line with constant gap between each other, and the weeds will grow in the gap between two standing crops. The field will always be in wet condition and soil will be in loose condition so the weeds will not be a deep rooted shown in figure 1.

Figure 1. Working Field

B. *Working Methodology*

The weeding machine have to placed in the gap between the standing crops (i.e.) two wheels of the weeder will be between two standing crops and the other two wheels will be between the other two standing crops so at one pass of the weeding machine, weeds in two gaps will be removed and left in the soil, So that it is converted into natural manure.

C. *Components Used*

- Cultivator (Weeding tool)
- Battery
- V-belt and pulley
- High torque DC motor
- Cage wheel
- Lead screw
- Remote control unit

D. *Cultivator*

In this weeding machine the tool used is cultivator which looks like a plougher but smaller in size. There are five forks in the plougher. The arrangement of the forks is not uniform (i,e) two forks are nearer to the frame and the other three are offset at certain distance from the frame in order to remove the weeds completely without any gap refer with figure 2.

Figure 2. Cultivator for weeding machine

E. *Cage Wheel*

Normal vehicle wheels which is used in the road for the transportation cannot be used in this weeder because, the field in which the weeder going to work is a muddy field so the normal wheels will not get much grip to move in the muddy field. So new cage wheels are developed with new design parameter has been followed shown in figure 3.

Figure 3.newly developed Cage Wheel for weeder machine

Advantages of Using Cage Wheel

- Can overcome any type of obstacles
- Will not get struck in mud
- Partial weeding is occur
- Will not get slip inside the field.

F. *Lead Screw*

The weeding tool must penetrate in the soil for particular depth to remove the weeds effectively, so in order to keep the weeding tool inside the ground a screw rod controlled by dc motor is used.

So whenever the weeder is used in the field the weeding tool is moved downwards into the ground and moved upwards when is moving out of the field just by actuating the lead screw refer with figure 4. Dc motor used for controlling the lead screw is high torque dc motor so that it can with stand heavy load

Figure 4.Assembly of Cultivator and Lead Screw

III. DESIGN CALCULATION

A. Groove Pulley

a. Selection of V-Belt

STEP 1: Determination of correction factor according to the service (*Fa*).It depends upon the type of driving unit, the type if driving machine and the operational hours per day.

(*Fa*) = 1

STEP 2: **DESIGN POWER CALCULATION**

Design power = (*Fa*) * (transmitted power)

= 1*1.50

Design power = 1.5 kw

STEP 3: **SELECTION OF BELT CROSS SECTION**

Belt cross section is selected as Z Based on the power to be transmitted and input speed

Input Speed = 1800 rpm

Power Transmitted = 1.5 kw

Based on the cross section of Belt Following datum is taken

Pitch Width (wp) = 11 mm

Nominal Top Width (w) = 13 mm

Nominal height (t) = 8 mm

Recommended minimum pitch diameter of pulley (d)

= 85mm

STEP 4: **PULLEY DIAMETER CALCULATION**

Diameter of the pulleys can be calculated using the relation

$$D = d\frac{(\text{input speed})}{(\text{output speed})}$$

$D = 85(1800)/1440$ D = 106 mm

STEP 5: **CALCULATION OF BELT LENGTH**

Belt length is calculated using following relation

$$L = 2c + \frac{\pi(D+d)}{2} + \frac{(D-d)(D-d)}{4c}$$

C = centre distance between two pulleys

C = 200 mm

L = 200 + 300 + 1.1 L = 501.1 mm

Considering preferred Belt length Lp = 530 mm

STEP 6: **CORRECTION OF BELT LENGTH**

Based on the preferred belt length centre distance again calculated

$$Lc = 2c + \frac{\pi(D+d)}{2} + \frac{(D-d)(D-d)}{4c}$$

Lc = 530 D = 106 mm d = 85 mm

Solving the equation using the above values we get

Cc = 115 mm

STEP 7: **CORRECTION FACTOR FOR BELT PITCH LENGTH**

(Fc) = 0.92

STEP 8: **ARC OF CONTACT FOR SMALLER PULLEY**

Arc length of smaller pulley is given by the equation

$$\alpha = 180 - \sin^{-1}\frac{(D-d)}{(2c)}$$

Substituting the values of D, d, C we get α as

α = 174.7 degree

Corresponding correction factor for α value

Fd = 0.99

STEP 9: **POWER RATING**

Based on the type of cross section power rating is selected

Power rating = 1.8 kw

STEP 10: **NUMBER OF BELTS REQUIRED**

Required number of belts is calculated using following relation

$$\text{No of belts} = \frac{P * Fa}{Pr * Fc * Fd}$$

Substituting the values in above equation we get

Required no of belts = 1

b. Result

Belt cross section	= Z
Diameter of larger pulley (D)	= 106mm
Diameter of smaller pulley (d)	= 85mm
Centre distance between centers of two pulleys (c)	= 115mm
Length of the belt (L)	= 530 mm

IV. PART DIAGRAM OF WEEDING MACHINE

A. Cultivator

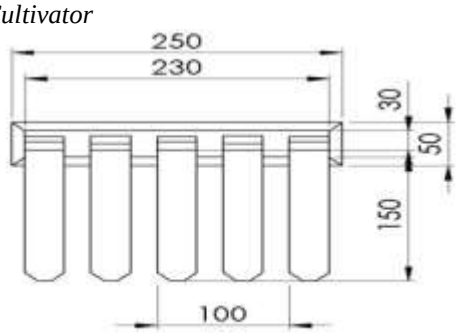

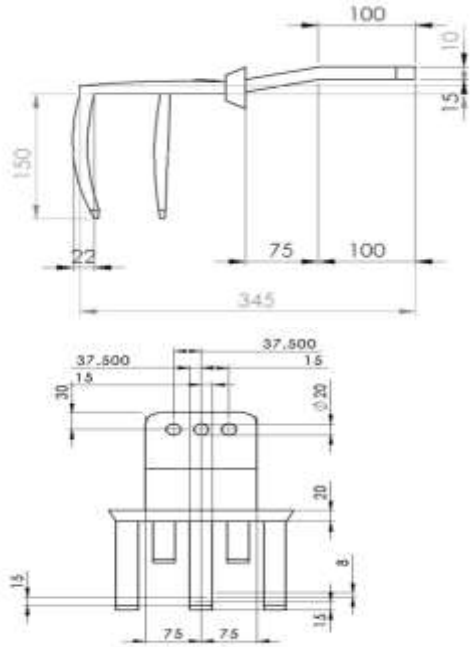

Figure 5. Part Diagram of Cultivator design

B. Cage Wheel

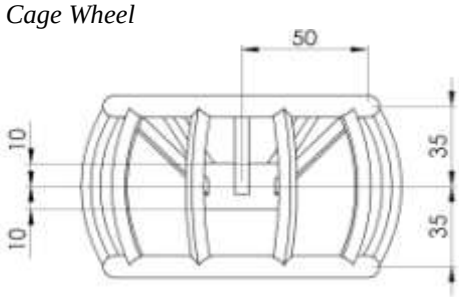

Figure 6. Part Diagram of Cage Wheel for weeding machine

C. Chassis

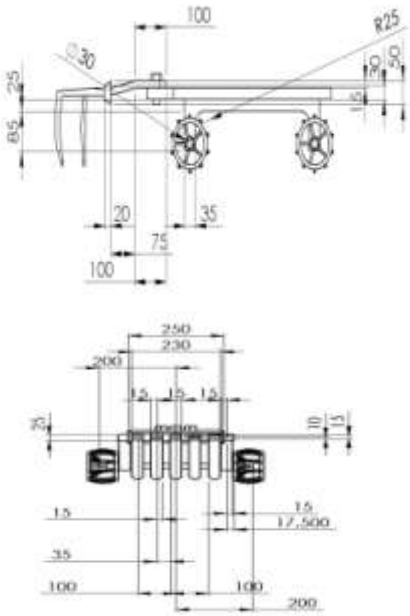

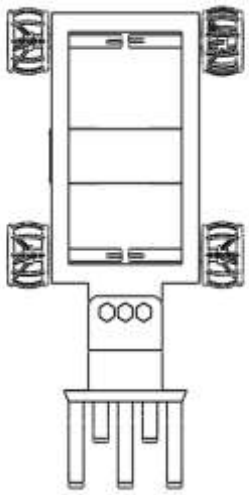

Figure 7. Part Diagram of Chassis design

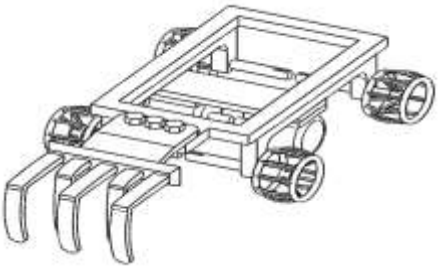

Fig.8. Isometric View of weeding machine

V. DESIGN VALIDATION AND ANALYSIS

The analysis of the model is done using ANSYS.

A. Geometric Modeling:

Thesfork is modeled in ansys as shown in Fig **8(a-c)** The Pro-E model is then imported into ANSYS through IGES format which is widely used for the 3-D solid model data transfer.

B. FE Modeling:

The imported solid model was thoroughly checked for its continuity. Necessary rework is carried out to obtain good solid model. The following steps are carried out for FE Modeling:

C. Selection of Element:

8solid185 is defined by eight nodes having three degrees of freedom at each node translations in the nodal x, y, and z directions. The element has plasticity, hyper elasticity, stress stiffening, creep, large deflection, and large strain capabilities. It prevents volumetric mesh locking in nearly incompressible cases.

D. Material Properties:

The Properties selected were Structural, Linear, Elastic, and Isotropic. Young's Modulus: 2E9 N/mm^2

E. Meshing:

Free meshing method is used to the mesh the spoke and refined at the stress concentration zones.

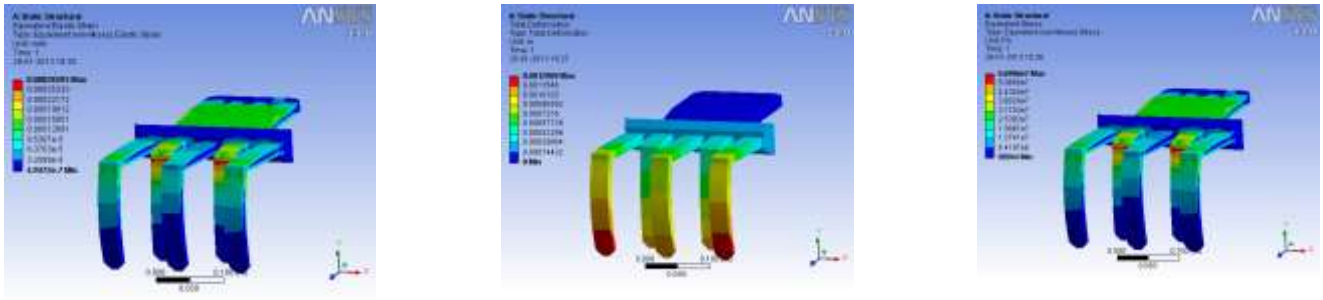

Figure 8 shows that the amount of rection force

F. Boundary conditions:

The three circular whole which is used to fix the cultivator in the frame using bolt and nuts is constrained. 500N of force is applied on the face of the forks to find the solution. The weaker parts in the design are found out, for this, static loading pattern is used. The varying pattern of the stresses shows that the design is weak and that stress concentration is present at some parts. Based on these results, modifications are so made in the design that the stress concentrations are made lesser by avoiding sharp corners. The analyses are carried on with the modified design and found that the stress concentrations are lowered and that total deflection has been lowered. The results of the analysis are shown below in a table. The stress, strain and deformation results are shown in table 2. The third spoke is thereby selected for fabrication as stress withstanding capability is found to be greater and with minimum deflection.

Table II. Nodes and stress details

No.of nodes	Deflection (m)	Max stress (N/m^2)	Min stress (N/m^2)	Max strain	Min strain
15253	1.70286	9.33e-7	15863.4	2e-4	1.3e-7

VI. CONCLUSION

This paper was carried to investigate the influences of weeder machine with varying paddy field. Mainly focus on remove the tiny plants which grow along with paddy. Some important characteristics are

- it can be used for different types of field with different gap between two standing crops
- Remote controlled operation reduces the human labour requirement and makes it easy to weed the field
- Time consumption is reduced when compared with other weeding techniques
- overall of weeding cost of the process is reduced
- user friendly machine so that anyone can easily operate the machine

For weeding the agricultural land without damaging the crops is achieved.

VII. FUTURE RECOMMENDATION

Certain modifications are advice to the prescribed design before marketing. One is that it will be better length of cultivator. This will provide removal of unwanted tiny plants this will also help to better growth. Another modification is regarding the screw mechanism. It will be of great help adjust the height of the cultivator.

REFERENCES

[1] Ebrahimi Mohammad Sadegh, Kalantri Khalil, Asadi Ali and MohammadiDavoud "Analysis of paddy-field consolidation effects for Iranianricefarmers"Journal of Agricultural Extension and Rural Development Vol. 3(10), pp. 182-185, 16 September, 2011

[2] Sripriyan K , Ananathabuban k, M Uthayakumar "Design and Analysis of Fork Mechanism in Paddy Field" in Intenational Conference on Advanced Manufacturing (INCAM 2013) Page no. 194.atKalasalingamUniversity,TamilNadu-india. ISBN: 978-93-80686-50-9.

[3] Anbumozhi V, Matsumoto K, Yamaji E (2002). "Sustaining Agriculture through Modernization of Irrigation Tanks: An Opportunity and Challenge for Tamilnadu, India". Agricultural Engineering International: The CIGR J. Sci. Res. Dev. Manuscript LW 01 002. Vol.III.

[4] K.Sripriyan, R Mohankumar, M Prabhakaran, R Kesavraj, Gunasekar and Amal M Verghese"Design and Fabrication of Fork Type Semi-Automated Weeding Machine"International Conference on Global Challenges, Strategies and Solutions in Engineering, Business and Disaster Management ICBDM 2013"Noorul Islam University in Associated with IEEE Electron Devices Society, Madras Section.

[5] R.K. RATHOD, P.A. MUNDE AND R.G. NADRE "Development of tractor drawn inter-row rotary weeder" International Journal of Agricultural Engineering, Vol. 3 No. 1 (April, 2010) : 105-109

[6] Tekade Manisha, Dhaliwal I S "Performance of power operated rotary weeder in sugarcane and maize" Journal of Research Year : 2007, Volume : 44, Issue : 3 First page : **(230)** Last page : (233) Print ISSN : 0048-6019. Online ISSN : 2277-1271

[7] VICTOR V M, VERMA A "Design and Development of Power-operated Rotary Weeder for Wetland Paddy" AgricMech Asia AfrLat Am ISSN: 0084-584, VOL.34;NO.4;PAGE.27-29(2003).

[8] R. Yadav and S. Pund "Development and Ergonomic Evaluation of Manual Weeder". Agricultural Engineering International: the CIGR Ejournal. Manuscript PM 07 022. Vol. IX. October, 2007.

[9] R. Remesan, M.S. Roopesh, N. Remya and P.S. Preman. "Wet Land Paddy Weeding- A Comprehensive Comparative Study from South India". Agricultural Engineering International: the CIGR Ejournal. Manuscript PM 07 011. Vol. IX. December, 2007

[10] F. E. Cherati, T. Naij , A. Amraei and Y. Hosseinpor"The Evaluation and the Comparison of the effect of without Engine Power and Power Mechanical Systems on Rice Weed " World Academy of Science, Engineering and Technology 63 2012

[11] Ratnaweera A.C , Rajapakse N. N., Ranasinghe C. J., Thennakoon T.M.S, Kumara.R.S.,Balasooriya C. P, Bandara M. A "DESIGN OF POWER WEEDER FOR LOW LAND PADDY CULTIVATION" International Conference on Sustainable Built Environment (ICSBE-2010) Kandy, 13-14 December 2010

[12] P. Dhananchezhiyan S. Parveen, K. Rangasam "Development And Performance Evaluation Of Low Cost Portable Paddy Thresher For Small Farmers" International Journal of Engineering Research & Technology (IJERT)Vol. 2 Issue 7, July – 2013 ISSN: 2278-0181

[13] Mohammad Reza Alizadeh "Field performance evaluation of mechanical weeders in the paddy field" Scientific Research and Essays Vol. 6(25), pp. 5427-5434, 30 October, 2011, ISSN 1992-2248 ©2011 Academic Journals.

[14] Md. AqibNaque, Akhtar Ali Rizvi, Amogh v. Tijare , A. B. Tupkar "Design, Development and Fabrication of Soil Tiller and Weeder" international journal of innovations in engineering and technology(IJIET) Vol. 2 Issue 2 April 2013, ISSN : 2319-1058