Device Isolation in IEC61850 Based Substation Protection Systems

Sajad Amjadizeynalhajelo, Akhtar Kalam
College of Engineering and Science
Victoria University
Melbourne, Australia
Sajad.amjadeynalhajelo@vu.edu.au
Akhtar.kalam@vu.edu.au

Abstract**—**Over the past decade, the development and improvement of the IEC61850 Standard has brought many new advantages and features which makes it more attractive to the power utilities, vendors and protection engineers. From the perspective of substation protection systems maintenance and device testing, Edition 2 of IEC61850 introduced additional features that address and warrant configured substation automation performance and execution of test procedures that further heighten the supremacy of the standard. This paper outlines how to implement these new features in multi-vendor based substation protection systems when isolation is required during different types of testing such as commissioning, acceptance and routine maintenance testing. An example of device isolation for maintenance test in an energized IEC61850 based substation is proposed in this paper. The authors also address issues that still are ambiguous topics for protection engineers when dealing with IEC61850 based devices testing.

Keywords**—***IEC61850; Generic Object Oriented Substation Event (GOOSE); Interoperability; Intelligent Electronic Device(IED); IED Isolation, GOOSE Isolation; GOOSE Simulation; Edition 2 of IEC61850; IED testing.*

*****

I. INTRODUCTION

Due to an urgent need for an international protocol for power protection and substation automation, the International Electrotechnical Committee (IEC) and IEEE worked together to advance the existing communication protocols for substation communication.The objectives were to achieve a protocol capable of free configuration, interoperability and long term proof interoperability and free configuration. As a consequence, the first version of IEC 61850 was announced in 2004 as an international standard which provides a detailed specification of layered substation automation architecture. The communication architecture is composed abstract definition of classes and services which are independent of underlying concrete protocol stacks and deployment platforms[1].The protocol incorporates the use of logical nodes to resolve problems related to interchangeability, but also physical character mappings to overcome IED proprietary restrictions. The protocol does not describe any individual implementations, communication architectures or productfunctionalities. It instead focuses only on the visible specifications of both primary and secondary equipment[2].

A. The Structure of IEC 61850 based Substationsand its Basic Components

IEC61850 is deigned in three hierarchylevels namely station or enterprise level, bay level and process level to allocate its devices and functional elements. The station computer, HMI, SCADA, gateway and RTU are established at station level. IEDs which perform protection and control services are located in bay level. Accordingly, all primary side devices such as switchgears, disconnectors, earthling switches, circuit breakers, conventional and non-conventional transformers are located in the process level which is assigned to perform control and measurement services. In order to achieve communication between these three levels and their devices, IEC61850 introduces a data model and abstract using mapping system. This mapping system enables the IEC61850 devices to transfer information through different levels of the substation using three important messaging technologies known as:"the Manufacturing Message Specification (MMS), the Generic Object Oriented Substation Event (GOOSE) andSampled Value (SV)" [3].

Figure 1 shows that the sampled value messaging is vertical communication between the devices connected from process level to bay level. The non-conventional transformers are currently most popular examples of applications that use SV messaging. The GOOSE is another highly advantageous message which is used as a horizontal communication in bay level to transfer information between IEDs located in bay level. In IEC61850 based substation, devices use Ethernet network and fiber optics to publish and receive the aforementioned message which is referred as peer to peer communication.

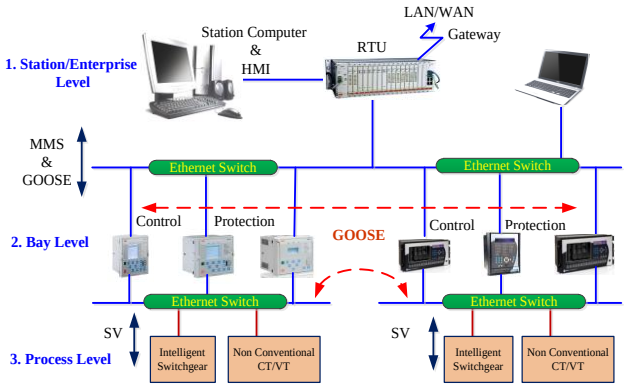

Fig. 1. Schematic diagram of IEC61850 designed in three different layers

The IEC61850 incorporates the use of sophisticated object model abstracts to achieve interoperability between devices from different vendors.

- **Server**: the server represents the visible behavior of a device using the network, such as the Ethernet.
- **Physical Device:**The device that connects other components such as Ethernet switch to the network is

called physical device. It is identified by IP address.

- **Logical Devices (LD):**the presentation of device in IEC61850 is intended to be unique and meaningful. Each component and device has its own distinctive name according to the standard. IEC61850 labeled the devices as logical device which are connected to the server through Ethernet switch. IED is an example of logical device in IEC61850 based system. Within a logical device multiple logical nodes could be located.
- **Logical Nodes (LN):** logical node represents functions to be performed by a logical device. Circuit Breaker Switch (CSWI) is an example of a LN which represents the control function of circuit breaker switch.Logical nodes are described in details in Clause 5 of IEC 61850-7-4 [4].
- **Data Objects or Data Classes (DO):**all logical nodes in IEC61850 contain data objects which are labeled by standard. It gives more details about the status of the function within logical nodes.
- **Data Attributes:**all data objects in IEC61850 contains data attributes which represent more details about the behavior, status and performance of the data object connected to the logical node, for instance, quality (q), status value (stVal) attributes. These common attributes are the Clause 6 of IEC 61850-7-3 listed all data attribute and their functionality.
- **Common data types:**data in digital formats, for instance: Coded Enum, Integer, Bit String, and Boolean.

Figure 2 shows an example of IEC61850 based device labeling in feeder Bay A1.

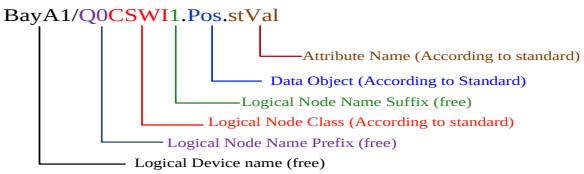

Fig. 2. Labeling of circuit breaker in IEC61850[5]

B. *Substation Configuration Language (SCL)*

IEC61850-6 introduces XML-based Substation Configuration Language (SCL) as a common language to accomplish interoperability between devices. Accordingly different forms files using the common based language are brought together in part 6 of the IEC61850 standard. These files are as follows [6]:

- Description of Configured IED (CID)
- Capability Description of IED (ICD)
- Instantiated IED Description (IID)
- Description of System Exchange (SED)
- Description of Substation Configuration (SCD)
- System Specification Description(SSD)

The development process of an IEC61850 based project is subject tothe accessibilityof software tools that make use of these files in the process of IEC61850 devices configuration.

C. *IEC61850 GOOSE Messaging*

Peer to peer communication(the capability of exchanging data between devices) is one of the distinguishedadvantages of the IEC61850 Standard which facilitates the GOOSE message communication between devices and has made it attractive to protection and control specialists. The GOOSE is a time critical message which uses Ethernet switch to be published in the network fast and efficiently. GOOSE can be mapped to the network as a publisher/subscriber mode. Therefore, all IEC61850 based devices have the capability of sending or receiving GOOSE message being published in the network.

Although GOOSE is not new and it was already introduced in UCA protocol, the IEC61850 presented an advanced version of this messaging technology which is much more flexible and complicated compared to UCA GOOSE. For instance, the number of messages that can be sent or received from an IED in IEC61850 based substation isincreased. Moreover, data objectsof theIEC61850 GOOSE message are able to transfer more and various data attributessuch as BitString, Floating, Coded Enum and Boolean. In addition, the GOOSE message used in IEC61850 is published periodically which increases the security and safety in the network.

IEC61850-8-1 defines the mapping and the syntax of the GOOSE message. In order to manage a GOOSE message, the standard defines a separate block called GoCB (GOOSE Control Block). This block is a part of LLN0 (Logical Node of any Logical Device). This block holds different attributes which are defined in the standard. A GOOSE message contains a GOOSE Control Block, Control Block Reference, Data Set Reference, GOOSE ID and communication details. In data reference, the dataset members or items which contain status information are defined such as relay trip, breaker status, quality and timestamp[7].

II. IEC61850 Device Testing

When dealing with IEC61850 based substation systems and their devices, there are two types of testing categorized according to the systems specification and testing purposes known as: Product Testing and Systems Testing. While the product testing involves all testing related to the devices and their functionality based on their technical specifications, such as Device Acceptance Testing , Device Interoperability Testing, Integration Testing and Factory Acceptance Testing, the Systems Testing includes all functionality and performance testing related to the configured IEC61850-based substation system and their compliance with the standard such as Commission Testing, Conformance testing, Site Acceptance Testing , and Maintenance Testing.

A. *Device Acceptance Test*

The first step to validatethe correct behavior of a new device before being used in substation protection, automation and control system is known as a device acceptance test (DAT). This test ensures that the device trulymeets all technical descriptionslisted in the device documentation that are of interest to the user. In other words, DAT is a prerequisitefor making the product acceptable for usein the protection scheme. Since the DAT is a laboratory based experiment, it essentially needs to be designed based on a number of test scenarios that, as practically as possible, emulate the user's substation environment.

B. *Conformance Test*

Manufacturers of IEDs are required to prove that their devices are capable of complying with theIEC61850 Standard mechanism. Therefore the conformance testing is a laboratory

based experiment to assure the user of a device that the device will meet the requirement of IEC61850 standard.

C. Device Interoperability Test

One of the foremost objectives of the IEC 61850 Standard is to achieve interoperability between different vendors' devices. In a peer to peer communication based platform, device interoperability test ensures that the device exchanges data correctly with other vendor's devices[8]. The interoperability test has been performed repeatedly to prove the correct behavior of any device as an integrated part of a multi-vendor system. From the point of the requirement for virtual isolation, the majority parts of the device interoperability test needs to be performed under the normal operating condition and isolation is not required. However, there is an exception, when the capabilities of IEDs working together as a protection scheme need to be tested. In this case, the virtual isolation is required which will be discussed later on in this paper.

D. SystemIntegrationTest

Besides the interoperability capability between devices, their performances need to be in accordance with the protection system development requirement. Whilst the interoperability test ascertainsthat the IEDs communicate with each other, the integration test functions one phasefurther and verifiesthat they talk fast and efficiently enough. There is no need for virtual isolation during integration testing.

E. Factory Acceptance Test

Another important customer agreed test is called the Factory Acceptance Test (FAT). It is an agreement between the final user and the system integrator to detect any possible potential problems existing in a device in an earlier stage of the project, when they are less costlyand complicated to fix. Sinceduring the factory acceptance test not all components of the system are available, the test system is required to be capable of simulating any device missing from the actualprotection scheme.

Moreover, in a FAT all existing components of the system are required to be configured and programmedsubject to the requirements of the real system application. Therefore, the configuration of all devices which are designed for the project in SCD files format needs tobe available. FAT is a laboratory based experiment and there is no need to use any isolation test on IEDs at this stage.

F. Commissioning Test

When the components of a designedapplication are properly configured andcommissioned, the commissioning test needs to be performed to prove that the devices are configured appropriately, according to the requirement of the application. Thus, fora commissioning test, all functional elements used for protection and control of the equipment are expected to be operating under normal condition. Consequently, there is no need for virtual isolation during the commissioning test.

G. MaintenanceTesting

In order to maintain a substation protection under normal operating condition, and keep it up-to-date in response to the latest requirement of the industry standard, maintenance testing needs to be performed. Its goals are therefore to detect and diagnose equipment problems, or to confirm whether all required actions taken to modify configuration, replace, repair or upgrade protection devices or other components of the fault clearing scheme, have been effective or not. The maintenance could be divided into two sub-categories:

1) *Scheduled Maintenance Test:*is a part of the "Site Maintenance Proposed Plan"performed periodically to prove that the protection system and their devices meet all the requirements of the system. Moreover it examineswhether all individual components work under normal condition and in compliance with the configuration of the protection schemeor.

In IEC61850-based substations, a broad collection of monitoring functions exists due to multi-functional protection devices such as IEDs. Equipment failure or human errors cause irreparable damages to the system and other equipment. Therefore, the scheduled maintenance test is highly crucial and recommended to be performed regularly to reduce any possible risks.

*2) Maintenance Testing Due to Abnormal Protection System Performance:*is required when the workings of devices in the system are faulty: viz., in the context of fault detecting and clearing schemes, if a device operates when it is not supposed to, or it does not operate when it is required to. Therefore, the faulty device needs to be tested to identify the problem associated with it and to take effective action to stop any additional damage to the rest of the system. After resolving the device problems, different types of testing described earlier: such as acceptance testing, interoperability testing and conformance testing are performed.

III. IED ISOLATION FOR TEST PURPOSES (VIRTUAL ISOLATION)

While acceptance and interoperability tests are laboratory based experiments and they do not require virtual isolation during testing,the maintenance test needs virtual isolation when the device or its functional elements are under the test in an energized substation. There are different levels of isolation for IEC61850 based substation devices based on the following testing objectives:

- function elementtesting;
- sub-function orfunctiontesting;
- wholeIEDtesting.

Therefore, the level of virtual isolation varies according to the objectives of the test. For instance, if a protection function such as PTOC (Overcurrent Protection) needs to be tested this test is categorized under the "isolation of sub-function or function testing". Therefore, only PTOCfunctionis requiredto be virtually isolated from the protection system. Correspondingly for whole IED testing, the complete IED should be isolated from energized substation.

The aforementioned isolation levels are not only required for consideration when a test plan is developed for a zone substation system, but the specific capability of the system to control and monitor the mode and behavior of different functional elements is essential. This is only achievable in IEC61850 based substations that did not exist in traditional substation's devices.

Edition 1 of IEC61850 mentioned a number of features to be used for testing of IEC 61850 devices. These features covered the possibility of:

- setting the mode of a function of logical node (LLN0) in test mode
- setting GOOSE message as a test message being

published for test purposes

- setting a control command in a test mode when it is being sent to the other devices
- putting a flag test on the quality of the a particular data attribute that is being sent from a server to other devices.

Since Edition 1 did not explain in detailhow to implement the above mentioned possible testing features, each vendor has put into operationits own proprietary tools and engineering methods toachieve test objectives. As a consequence, interoperability issues have been raised between vendors from the point of testing IEC61850 based substation devices. These problemsare not only addressed and improved in Edition 2 of IEC61850, but also additional features and detailed specifications are added to the standard which enables engineers and utilities to achieve a seamless solution. These new features are as follows:

A. Using Test Flag for the Input Signal and/or Logical Node

1) *NormalOperating Condition:* If the input signal[1] is set to FALSE for its test mode and the test mode of the logical node (LLN0) within physical device (IED) is FALSE, then the output will be executed for any operating command. This state represents the normal operation condition of the protection system (Fig. 3 and Table I).

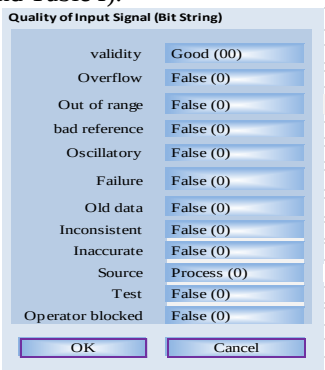

Fig. 3. The flag test of quality of the input signal being published from an IED is set to False

*2) The TEST flag of the input signal is set to FALSE and the IED is set to TEST mode:*When an IED is being tested, any interruptionand unnecessary reaction in substation should be eliminated. Therefore, in order to make the IED under test to discard and bypass all live GOOSE messages coming from the other IEDs without any response, the IED needs to be set in a TEST mode(Table I).

3) Input signal is set to TEST flag, whereas the test mode of the logical node is set FALSE: If the test mode of the input signal is set FALSE and the test mode of logical node (LLN0) within physical device (IED) is set to be TRUE, then the receiving command will not be accepted. It meansthe IEDreceivesthe GOOSE coming from other IEDs and ignores them (Fig. 4).

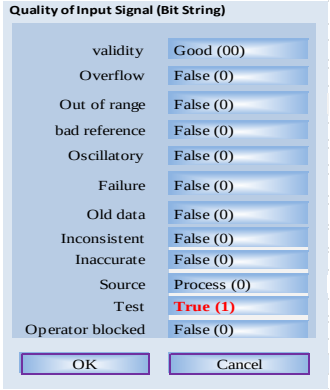

Fig. 4. The quality of input signal being published from an IED under test which is flagged as TEST signal.

This state is used when other IEDs are working in energized substation, under normal condition, and are required to discard the signal with a TEST flag coming from IEDs under test. For instance, when an IED needs to be replaced or upgraded, all signals publishing from that IED must be set in TEST mode. This means the other IEDs and devices do not react to its messages and ignore them (Table I)

As Figure 5 shows, the IED (C) is under test, and itsGOOSE signal (GOOSE C)is publishedas flagged to TEST signal. At the same time the modes of the IED (A) and IED (B) are set as ON which means that the IED (A) and IED (B) are working in normal condition, and they discard the GOOSE coming from IED (C). Similarly, because thefunction of the IED (C) isset to TEST mode, it will discard theGOOSE B coming from the IED(B).

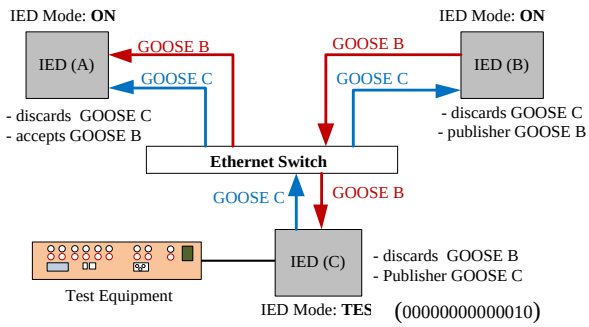

Fig. 5. IEDs responses for GOOSE signals when one of the IEDs is under test mode.

4) *Both input signal and the mode of the logical node (LLN0) within physical device (IED) are set to TEST modes:* This scenario is used for maintenance test purposes. All bay level and process level devices are required to be tested periodically to make sure that they fulfill the requirement of the protection system. When an IED is set to TEST mode, and an input signal with a flag test TRUE is injected to IED, it is expected the IED and other contributing testing devices operate as if there is a real fault in the system. It means the command will be executed, and a wired output will be initiated. Consequently the breakers will be energized. This state obviously is a complete and comprehensive testing process, which could be performed on both bay and process levels devices, in an energized substation(Table 1).

5) Thetest bit of input signal is set TRUE, and the logical node is set to "TEST-BLOCKED" mode: The mode "TEST-BLOCKED" is the feature mentioned in Edition 2 of the

[1]In IEC61850 based substation systems, devices are operated through either control service command or by GOOSE signal which are subscribed to. For simplicity therefore, instead of using both GOOSE and control service command, the term "input signal" is used in this paper.

IEC61850 Standard. It is effectively practical when performing a test in an energized substation without any intention of having a real reaction in the process bus. When the input signal has the testflag TRUE and a logical node of a physical device is set to TEST-BLOCK, the command will be processed and all the reactions (e.g. sending and receiving command confirmation, time stamp) will be generated. However, the wired output will not send any command to the process leveldevices such as breakers. To set an example, when an IED is replaced, changed or upgraded, its performance needs to be verified over the substation. It should prove that its new configuration and firmware complies with the original requirement of the whole system, and it is capable of interoperating with other IEDs in a live substation [9].

TABLE I. IED PROTECTION AND CONTROL PERFORMANCE

TEST Quality of Input Signal	Test Mode of Logical Device	Test Mode of Logical Node	Command Execution	Wired Output
FALSE	ON	ON	√	√ (normal condition, it will trip if fault occure)
FALSE	TEST	TEST	×	×
TRUE	ON	ON	×	×
TRUE	TEST	TEST	√	√
TRUE	TEST	TEST-BLOCK	√	×

IV. CONCLUSION

The IEC61850 protocol is an engineering process capable of achieving interoperability in Substation Automation Systems.The GOOSEmessaging is one of the most important achievements of IEC61850 that enablesthe devices located in the bay level of IEC61850 substation totransform data forsupervision and protection purposes.However neither owing to lack of understanding of the IEC61850 Standard nor lack of tools, the GOOSE messaging technology and IEC61850 is being neglected rather than being substituted by traditional substation automation systems.This paper has tried to show that how the Edition 2 of the IEC61850 Standard addresses these issues and solves problems relating IEC61850 GOOSE messaging and IED isolation. Differentapproaches arepresented in terms of IED isolation for test purposes in an IEC61850 basedsubstation. However, there is still a tangiblelack of tools to entirely take the advantage of interoperability and GOOSE messaging technology in IEC61850 bases substation which needs to be addressed urgently by researchers, vendors and manufactures.

REFERENCE

[1] S. Jaloudi, E. Ortjohann, A. Schmelter, W. Sinsukthavorn, P. Wirasanti, N. Alamin, et al., "Integration of distributed energy resources in the grid by applying international standards to the inverter as a multifunctional grid interface," in PowerTech, 2011 IEEE Trondheim, 2011, pp. 1-8.

[2] A. Kalam and D. P. Kothar, Power systems protection and communications. Kent, UK: New Age Science Limited, 2010.

[3] P. Jongjoo, I. Eunkyu, A. Sangwoo, J. Cheoljon, and C. Jonghwa, "IEC 61850 Standard Based MMS Communication Stack Design Using OOP," in Advanced Information Networking and Applications Workshops (WAINA), 2012 26th International Conference on, 2012, pp. 329-332.

[4] IEC61850-7, Basic Communication Structure for Substation and Feeder Equipment, 2 ed.: International Electrotechnical Committee 2012.

[5] R. E. Mackiewicz, "Overview of IEC 61850 and Benefits," in Transmission and Distribution Conference and Exhibition, 2005/2006 IEEE PES, 2006, pp. 376-383.

[6] T. Sidhu, M. Kanabar, and P. Parikh, "Configuration and performance testing of IEC 61850 GOOSE," in Advanced Power System Automation and Protection (APAP), 2011 International Conference on, 2011, pp. 1384-1389.

[7] IEC61850-8-1, "Specific Communication Service Mapping (SCSM) – Mappings to MMS," in Part 8-1, ed: International Electrotechnical Committee 2012.

[8] P. Lloret, J. L. Velasquez, L. Molas-Balada, R. Villafafila, A. Sumper, and S. Galceran-Arellano, "IEC 61850 as a flexible tool for electrical systems monitoring," in Electrical Power Quality and Utilisation, 2007. EPQU 2007. 9th International Conference on, 2007, pp. 1-6.

[9] IEC61850-9-2, "Sampled Values over ISO/IEC 8002-3," in *IEC61850 Standar*, 2 ed: International Electrotechnical Committee 2012.

Sajad Amjadi received the B.Sc. Engineering degree from University of Tabriz, Iran in 2008 and completed Master of Electrical and Electronic Engineering from Royal Melbourne Institute Technology (RMIT), Melbourne in 2011. He is a member of Engineers Australia and he is currently pursuing his PhD at Victoria University, Melbourne, in the area of Power Protection and Communication Systems, in particular designing the Victorian Zone Substation Simulator Centre based on IEC61850 standard under the supervision of Professor Akhtar Kalam. His area of technical expertise is power protection, SCADA, substation automation systems and IEC61850 in particular, GOOSE messaging technology.

Akhtar Kalam (MIEEE '1981) received the B.Sc. degree from Calcutta University, Calcutta, India, and the B.Sc. Eng. degree from Aligarh Muslim University, Aligarh, India, and M.S. from the University of Oklahoma, Norman, and Ph.D. degree from the University of Bath, Bath, U.K. His Ph.D. work focused on the application of distance protection to series-compensated extra high-voltage lines. He has been actively engaged in the teaching of power systems for more than 30 years in the College of Engineering and Science, Victoria University, and overseas. He has conducted research, provided consultancy, and has more than 450 publications on power system protection and independent power generation. His major interests are power system analysis, power system protection, zone substation and expert system application in power systems, cogeneration, and renewable energy.