Design and Fabrication of Onion Seed Sowing Machine

Nilesh N. Jadhav
Lecturer
Department of E & TC
AIETP, Ashoknagar, Shrirampur
nnj121@gmail.com

Harshal R. Aher
Lecturer
Dept. Of Mech. Engg.
AIETP, Shrirampur
harshal.aher@rediffmail.com

Amol P. Ghode
Lecturer
Department of Mechanical Engineering
AIETP, Ashoknagar,Shrirampur
Amolghode101@gmail.com

Abstract—Today's era is marching towards the rapid growth of agricultural as well as industrial sector. To achieve the goal of the future food demands, the farmers have to implement the new techniques which will increase the overall crop production rate. This Paper deals with the various sowing methods used for onion seed sowing in India for seed and fertilizer placement. The comparison between the traditional sowing method and the new proposed machine which can perform a number of simultaneous operations and has number of advantages. The main focus behind this machine is to reduce the human effort as well as problem of availability of labor & there cost of work. Generally this machine reduces the cost of labor, efforts and total and fertilizer placement. The seed sewing machine is a key component of agriculture field. The performance of seed sowing device has a remarkable influence on the cost and yield of agriculture products. Presently there are many approaches to detect the Performance of seed-sowing device. The depth of seed sowing is affect the crop yield therefore to adjust the depth of seed sowing & head to head distance between two seed a seed metering device is the heart of seed sowing machine between seed varieties. High Precision planters have been developed for many varieties of crops, for a wide Range of seed sizes, resulting to uniform seeds distribution along the travel path, in seed Spacing. This technique result in improvement in yield: by proper operation in the field we are increase the productivity of seed through 5% to 10%.Plant to plant distance: We are maintaining the plant to plant distance by providing a 12 number of cells on rotor. Saving labor cost: The transplantation of onion require lot of labor as well as charge is more so we are by using this machine able to reduce the labor cost.

Keywords- Onion, Sowing, Transplantation, seed.

*****

I. INTRODUCTION

In developing countries like India mechanization of agriculture was started on the use of improved hand tools and bullock drawn improvements. Farm mechanization aims at higher production rate reduction in human drudgery. India's achievements have been increasing tremendously, but not in mechanization. One of the barriers achieving complete mechanization is the land holdings and its fragmentation. Due to small land holding is not possible to mechanize all the farming operations. Large machines cannot be operated these small farms. Also our farmers cannot afford to buy large costly machines.

Seed sowing machine is a device which helps in the sowing of seeds in a desired position hence assisting the farmers in saving time and money. The basic objective of sowing operation is to put the seed in rows at desired depth and seed to seed spacing, cover the seeds with soil and provide proper compaction over the seed. The paper discusses different aspects of seed wing machine which will be helpful for the agriculture industry to Move towards mechanization. The agricultural industry has always been the backbone of India's sustained growth. As the population of India continues to grow, the demand for Produce grows as well. Hence, there is a greater need for multiple cropping on the farms and this in turn requires efficient and high-capacity machines. Mechanization of the Agricultural Industry in India is still in a stage of infancy due to the lack of knowledge and the unavailability of advanced tools and machinery. In traditional methods seed sowing is done by broadcasting manually, opening furrows by a plough and dropping seeds by hand.

Agriculture has been the backbone of the Indian economy and it will continue to remain so for a long time. It has to support Almost 17 percent of world population from 2.3 percent of world geographical area and 4.2 percent of world's water resources. The Present cropping intensity of 137 percent has registered an increase of only 26 Percent since 1950-51. The net sown area is 142 MHz the basic objective of sowing operation is to put the seed and fertilizer in rows at desired depth and spacing, cover the seeds with soil and provide proper compaction over the seed. The recommended row to row spacing, seed rate, seed to seed Spacing and depth of seed placement vary From crop to crop and for different Agricultural and climatic conditions to achieve optimum yields and an efficient Sewing machine should attempt to fulfill these requirements. In addition, saving in Cost of operation time, labor and energy are other advantages to be derived from use of improved machinery for such operations. A traditional method of seed sowing has many disadvantages. This paper is about the different types of methods of seed sowing and fertilizer placement in the soil and developing a multifunctional seed sewing machine which can perform simultaneous operations. [1&2]

1.2 TYPES OF SOWING

The following are the three different types of seed sowing:-

1.2.1 Broadcasting: -

A field is initially prepared with a plough to a series of linear cuts known as furrows. The field is then seeded by throwing the seeds over the field, a method known as manual broadcasting. The result was a field planted roughly in rows,

but having a large number of plants. When the seeds are scattered randomly with the help of hand on the soil, the method is called broadcasting.[2]

Figure no.1.1: Broadcasting

1.2.2 Dribbling: -

Drill sowing and dribbling (making small holes in the ground for seeds) are better method of sowing the seeds. Once the seeds are put in the holes, they are then covered with the soil. This saves time and labor and prevents the damage of seeds by birds.

3. Another method of sowing the seeds is with the help of a simple device consisting of bamboo tube with a funnel on it attached to a plough. As the plough moves over the field the tube attached to it leaves the seeds kept in the funnel at proper spacing and depth. The plough keeps making furrows in the soil in which the seeds are dropped by the seed drill. The above sowing methods have the some disadvantages

Which are as follows:-

a) *No control over the depth of seed placement.*

b) *No uniformity in the distribution of seed placement.*

c) *Loss of seeds.*

d) *No proper germination of seeds*

e) *More labor requirement*

f) *Time required for sowing is more.*

Figure no.1.2:-Seed sowing in India

During sheriff sowing, Placement of seeds at uneven depth may result in poor emergence because subsequent rains bring additional soil cover over the seed and affect plant emergence. [2]

1.3 Limitations of Conventional Sowing Methods:-

The following are the limitations of Existing Machine:-

1. The Weight of the Machine is more.
2. Available for Tractors drive.
3. No Arrangement for depth control.
4. No Arrangement for seed bed preparation.
5. Improper compaction of soil over furrows.
6. Adjustment of row spacing is improper.
7. The cost of machine is more.

An effective sowing method can yield good results for different variety of crops. An effective sowing method should maintain the proper row spacing, plant density, seed rate, plant population etc. When these parameters are controlled there is increase in the yield of different crops. Some of the parameters which affect the yield of wheat, soybean and chickpea are sowing date, plant population, plant density, row spacing, plant spacing seed rate etc.

1.4 FUNCTIONS OF SEED SOWING MACHINE AND PLANTERS

Improved seed-cum-fertilizer drills are provided with seed and fertilizer boxes, metering Mechanism, furrow openers, covering devices, frame, ground drive system and controls for Variation of seed and fertilizer rates. H. Hedge [1] evaluates that depending upon climatic and Soil conditions, seeds are shown on well-prepared and leveled fields, on ridges, in furrows or on beds. To achieve the best performance from a seed drill or planter, the important factors Are to be optimized by proper design and selection of the components required on the Machine to suit the needs of the crops. The seed drill or planter can play an important role in manipulating the physical environment. The metering system selected for the seed should not Damage the seed while in operation the

functions of a well-designed seed drill or planter are as follows:

Meter seeds of different sizes and shape, Place the seed in the acceptable pattern of distribution in the field, Place the seed accurately and uniformly at the desired depth in the soilandCover the seed and compact the soil around it to enhance germination and emergence. [2&3]

II. FUNCTIONAL COMPONENT OF MACHINE

By eliminating limitation of component of conventional seed sowing machine we design new component and provide special arrangement for sowing of small seed such as onion seed. There are eleven functional components of seed sowing machine.

- Sara Machine
- Ground Wheel
- Furrow Opener
- Sweep
- Seed Rotor Shaft
- Ground Wheel Shaft And Intermediate Shaft
- Chain And Sprocket Arrangement
- Seed Tube
- Seed Covering Unit
- Seed Box
- Seed Rotor

3.1 SARA MACHINE:

The main frame consist of hitch unit which is use to connect a machine to tractor. Hitch unit consist of three point linkage hitch attachment. It consists of MS strips of 50×5 mm in size. Upper end of hitch is 55 apart from each other and form attachment for top link of tractor. The lower end is welded 320 mm apart on main frame. Two supporting MS flats are attached at the upper end to give the support and welded at rear end of main frame. Two 370 mm MS flat 50×5 mm are welded below main frame to from a support for the lower linkage attachment. Sara machine is shown in figure 3.1

Figure no.:-3 1 Main Frame (Sara machine)

3.2 GROUND WHEEL:

The ground wheel provided at the center of the frame from the functional component of power transmission unit. The diameter of the ground wheel is 280 mm. The 12 number of 20*4 mm strips are attached at the inner periphery of ground wheel to the hub by welding. The ground wheel rotates along with the shaft on which they are mounted. The lugs provided at the peripheral end help to develop better grip on the soil. The rotation of ground wheel causes the rotation of seed rotors in the seed box through chain and sprocket arrangement. The ground wheel is shown in figure 3.2

Figure no:-3.2 Ground Wheel

3.3 SEED FURROW OPENER:

There are 13 furrow openers for seed fitted on the channel frame of the planter as the desired placing. Each furrow opener is fitted with sweep. The distance between two furrows is 150mm. The furrow is made from M.S. strip of dimensions 40×10 mm.

Furrow opener is shown in figure 3.3

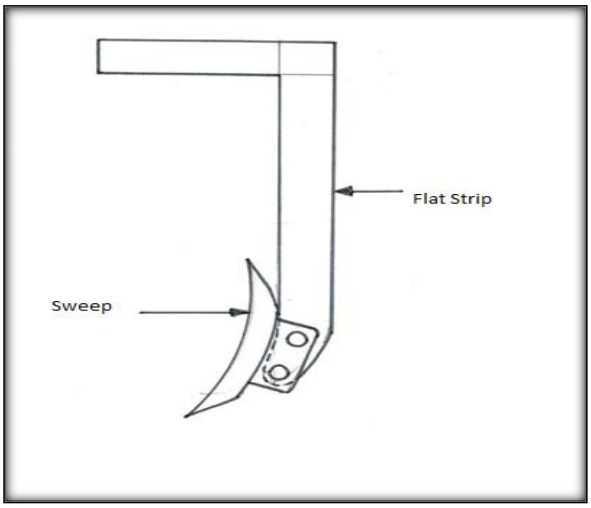

Figure no.:-3.3. Furrow Opener.

3.4 SWEEP:

There are 13 number of sweeps are fitted on the seed furrow opener with the help of M.S. strip whose one end is attach to the furrow by using M6 nut bolts as well as another end attach by welding. The inclination is provide for sweep for proper penetration in the soil. The space is provide between the seed furrow opener and sweep for insertion of seed tube. The sweep is shown in figure.3.4

Figure no: 3.4 Sweep

3.5 SEED ROTOR SHAFT

The power transmission shaft fitted to the seed box, rotate inside the bush provided at the end of each seed box. The shaft consists of MS bar of 20 mm diameter and 1260 mm length. Both end of shaft of diameter is 15 mm up to 2mm respectively after that provides a 2 mm slot on shaft both side up to 36 mm for positive engagement of seed rotors. At the centre of shaft sprocket is fixed. the seed rotor shaft is shown in figure 3.5

Figure no.3.5 Seed Rotor shaft

3.6 GROUND WHEEL SHAFT AND INTERMEDIATE SHAFT

Ground wheel and sprocket are rigidly mounted on ground wheel shaft. An intermediate shaft supports two sprockets. One sprocket is connected to the ground wheel shaft sprocket through chain and second sprocket is connected to the seed rotor shaft through chain.\

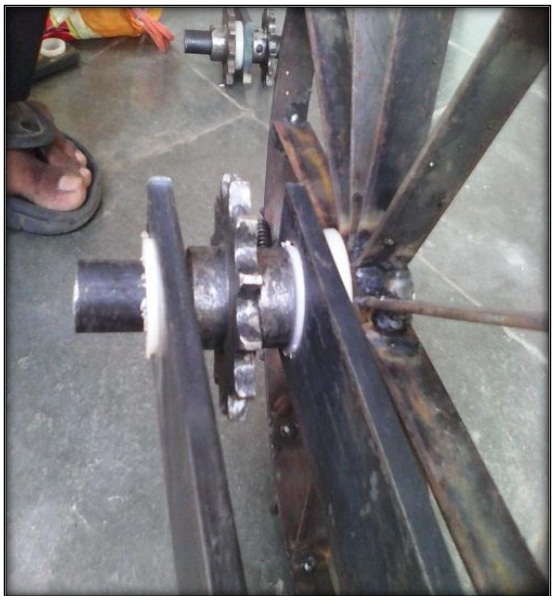

Figure no.3.6. Ground Wheel Shaft and Intermediate shaft

3.7 CHAIN AND SPROCKET ARRANGEMENT

The power to the shaft of the seed metering mechanism is transmitted by means of roller chain and sprocket arrangement. The power to the intermediate shaft provided at center is transmitted from ground wheel shaft; power from intermediate shaft is transmitted to the seed rotor shaft. The four sprockets of 70 mm diameter and having 13 teeth are used to transmit power to the shaft. Two sprockets are mounted on intermediate shaft, one sprocket on ground wheel shaft and one on seed rotor shaft. The chain and sprocket arrangement is shown in figure. 3.7

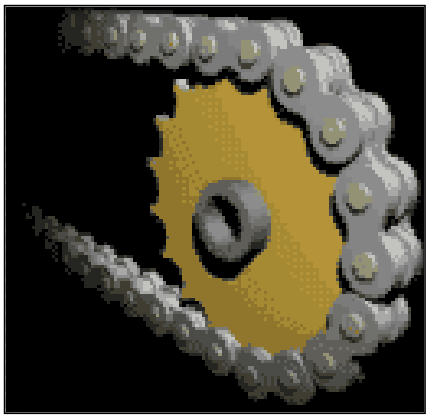

Figure no.3.7 Chain and Sprocket arrangement

3.8 SEED TUBES

13 number of plastic tubes each having length750 mm and each having diameter 12mm. there are 7 seed tubes are provided in first seed box and another six are attach to the second seed box. One end is fixed to the funnel and another end is provided in between sweep and furrow opener in order to drain the seeds in the furrows.

3.9 SEED COVERING DEVICE

The device is used to retain sufficient loose soil over a dropped seed to prevent moisture less and avoid a crust formation. The strip of MS flat of size 20*4 mm and 1700 mm long is used as a seed covering device. The strip is attached with a nut and bolts arrangement to the extended arms of the frame. The depth of the seed covering device is adjustable. The seed covering device is shown in figure.3.8

Figure no.:3.9 Seed covering device

3.10 SEED BOX

It is made up of 4mm thick plastic sheet. There are two seed box are provided in each box contain 7 rotor. The each seed box capacity is 1.5 kg of onion seed. The overall length and width of seed box 360 mm and 270 mm respectively. The box is mounted on secondary frame with the help of support. In secondary portion of the seed box a level of seed is maintained by adjusting the screws provided at upper side. The seed box is shown in figure.3.10

Figure no.:-3.10 Seed Box

3.11 SEED ROTORS

There are seven number of seed rotor are provided in each seed box. The outer diameter of seed rotor is 100 mm and thickness is 4 mm. There are 12number of seed cells are provided at periphery of each seed rotor. A elliptical hole is provided at the center of seed rotor. Elliptical shape of the hole provides positive engagement of the shaft. The seed rotor is shown in figure.3.11

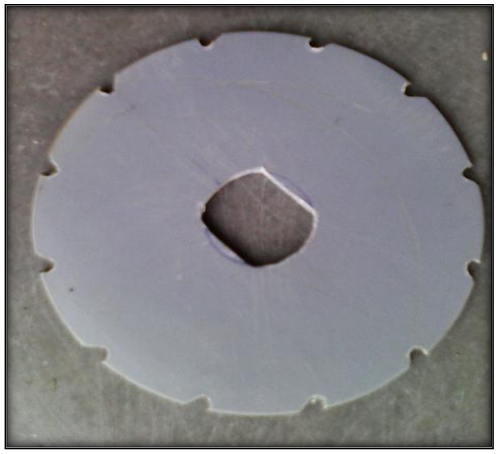

Fig no:-3.11 Seed Rotor

III WORKING OF MACHINE

4.1 WORKING OF SEED SOWING MACHINE:

When the implement attaché to the tractor and operated in the field. A tractor is drawn in forward direction ridges are formed on either side of Sara machine at spacing of 6 feet. The space between two ridges is can be made perfectly horizontal by adjusting top link of hitch unit attached to the tractor.

When tractor moves in forward direction the ground wheel in contact with the soil rotate. The lugs provided on the outer periphery of ground wheel provide a better gripping to the ground wheel due to which ground wheel rotate according to the grip provided. The ground rotation of ground wheel shaft is also rotate along with sprocket rotate. The rotary motion of the ground wheel is transmitted to the intermediate

shaft by using a chain mechanism. The intermediate shaft is provided to reduce the vibration and fluctuation. The power or motion from the intermediate shaft is transmitted to the sprocket mounted on the seed rotor shaft. When sprocket on the seed rotor shaft is rotate along with shaft also rotate.

The seed box shaft rotate with the help of chain sprocket arrangement along with rotates the vertical rotors with cells on the periphery fitted inside the seed box and bottom of the seed hopper as shown in figure

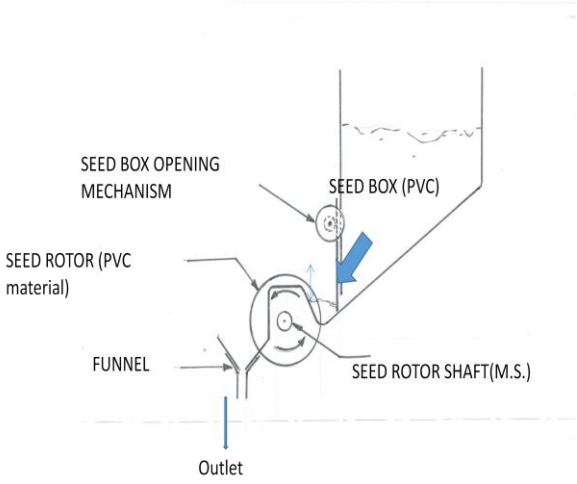

Figure no:-4.1 working of seed box

The seed are stored in the primary seed box. The seed are provide to the secondary seed box with the help of sliding mechanism maintain the level of seed in the box and the rotor pick up the seeds from the seed hopper in the cells and drop them through the funnel in the seed conductor. The seed through seed conductor are dropped in the soil at a depth of 15-20 mm and at required distance. When seed is dropped at specific distance then seed covering device cover the seed.

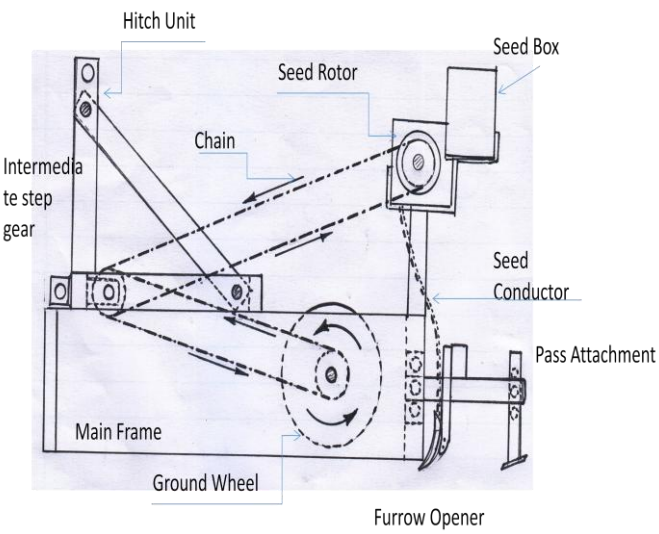

Figure no:-4.2 Working of Transmission mechanism

Figure no:-4.3 Onion seed sowing machine

IV DESIGN

VARIOUS COMPONENTS OF ONION SEED SOWING MACHINE.

Sara machine

Furrow opener, frame & seed covering unit.

Ground wheel and seed rotor.

Motion transmission unit.

Seed box and seed carrier.

5.1Sara Machine

We have used an available tractor drown Sara machine as one of the major part of our project.

Specifications

Drive-Tractor drawn.

Width of Sara machine=1.8288m (6 ft)

Thickness of plate=5mm

Material=M.S.

Tensile Strength= 340 N/mm^2

Yield Strength=380 N/mm^2

5.2 Furrow Opener

Specifications

Material=C15

Tensile Strength= 350 N/mm^2

Length=165mm

Thickness=10mm

Width=40mm

Design of furrow opener

We know that,

Drag force of soil for each furrow opener=200N

Crushing stress at the bolt,

$$\sigma c = \frac{P}{A}$$

$$= \frac{200}{2 \times d \times t}$$

$$= \frac{200}{2 \times 6 \times 2.5}$$

$$= 6.666 \, N/mm^2$$

d=Diameter of hole.

t=Thickness of plate.

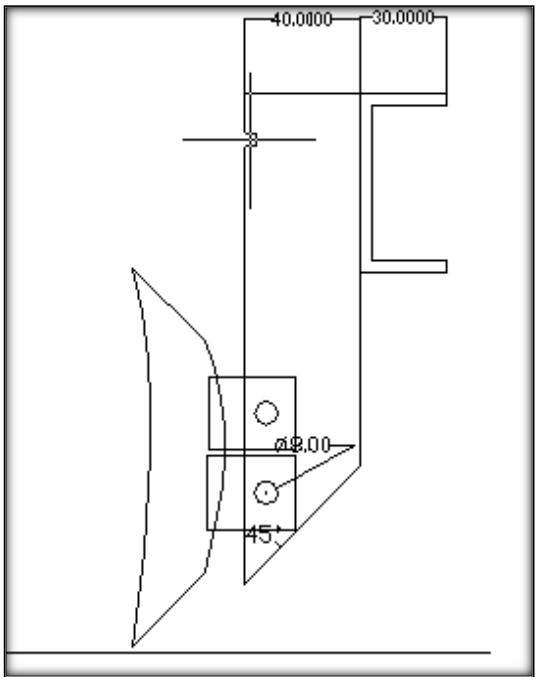

5.3 Bolt

Crushing strength of bolt

$$\sigma c = \frac{P}{A}$$

$$= \frac{200}{d \times t}$$

$$= \frac{200}{6 \times 10}$$

$$= 3.333 \, N/mm^2$$

Shear stress in bolt,

$$\tau = \frac{P}{A}$$

$$= \frac{200}{2 \times \frac{\pi}{4} \times d^2}$$

$$= \frac{400}{36\pi}$$

$$= 3.536 \, N/mm^2$$

Bolt Diameter selection

$$\tau \text{ all} = \frac{P}{A}$$

$$= \frac{Sut}{2} = \frac{350}{2} = 175 \, N/mm^2$$

$$= \frac{P}{A} \quad , = \frac{200}{2 \times \frac{\pi}{4} \times d^2}, = 175 \, N/mm^2$$

d=1.2mm

For the safe working and ease handling we select bolt of size d=6mm

Cantilever Selection

Specification

- Material=C15
- Sut=350 N/mm^2
- Length =30mm
- Thickness=10mm

Let,

FOS=4

$$\sigma all = \frac{Sut}{FOS} = \frac{350}{4} = 87.5 \, N/mm^2$$

Moment of Inertia (I) =

$$I = \frac{b \times d^3}{12}$$

$$= \frac{10 \times 30^3}{12}$$

$$= 22500 \, N/mm^2$$

Bending moment (M) =

M=P×L=200×150

=30000Nmm

$$\sigma c = \sigma t = \frac{M \times \bar{y}}{I}$$

$$= \frac{30000 \times 15}{22500}$$

$$= 20 \, N/mm^2$$

Motion Transmission Unit

- Chain Drive=

For positive motion transmission of nearly 1.5m, we have selected chain drive from ground wheel to the seed rotor shaft.

- Power required at 300rpm, 0.64mm to 1.34mm
- Chain of 08A type selected [9]
- Dimensions of chain,

Pitch =12.7mm

d=diameter of roller =195mm

b=width of roller =7.85mm

- Diameter of sprocket

$$D = \frac{P}{\sin\left(\frac{180}{Z}\right)}$$

$$= \frac{12.7}{\sin\left(\frac{180}{17}\right)}$$

=69.1158mm

- For unity gear ratio,

D1=D2=69.1158mm

- Center distance between two sprockets

For satisfactory performance

Centre distance=

30P< a<50P

a=50P

=50×12.7

=635mm

Number of link of a chain

$$Ln = 2 \times \frac{a}{p} + \left(\frac{z1+z2}{2}\right) + \left(\frac{z2-z1}{2}\right)^2 \times \frac{p}{a}$$

=129.12 links

Ln=129 link

5.4 Design Of Shaft

Specification

- material =C50
- Sut=740 N/mm^2
- Syt=600 N/mm^2
- Diameter=20mm

We selected chain drive for power transmission.
There is one tight side and one slack side.
i.e. f2=0
We design shaft according to ASME code

$\tau s = 0.75\times(0.18\times Sut)$
$=0.75\times0.18\times740$
$=99.9\ N/mm^2$
$\tau s = 0.75\times(0.3\times Syt)$
$=0.75\times0.3\times600$
$=126\ N/mm^2$

Smaller is selected.
Hence,
$\tau s = 99.9\ N/mm^2$
Torque on shaft,
Power required =0.1 kW

$$p=\frac{2\times\pi\times n\times T}{60\times1000\times1000}$$
$$0.1=\frac{2\times\pi\times63.6\times T}{60\times1000\times1000}$$

T=15000.47 N-mm
T=F1×Rs (Rs=Radius of sprocket)
15000.47= F1×35
F1 =428.58N
Bending moment on shaft,
$RA=RB = F1/2 = 214.29N$
Maximum bending moment at point P
B.M.@P= RA ×275
=214.29×275
=58930.40Nmms

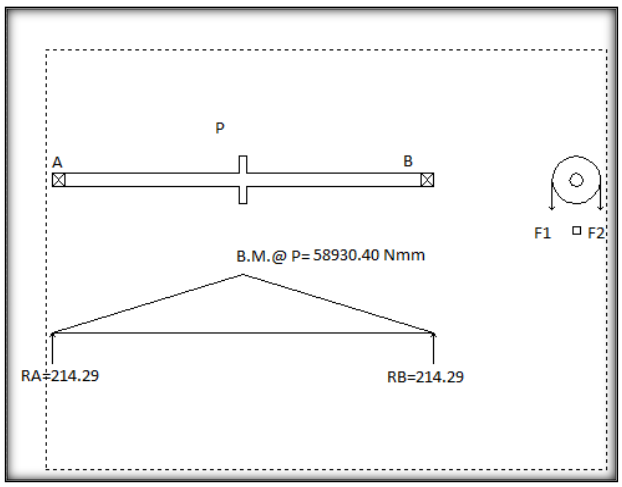

Equivalent torque,[7]

$$Te=\sqrt{(Kb\times M)^2+(Kt\times T)^2}$$

$$Te=\sqrt{(1.5\times58930.40)^2+(1.25\times15000.47)^2}$$

Te=90362.41N-mm
According to

$$\tau s=\frac{16\times Te}{\pi\times d^3}$$
$$99.9=\frac{16\times90362.41}{\pi\times d^3}$$

d=16.64mm

d≅20mm

Though the intermediate and ground wheel shaft is under lower stresses, for dimensional homogeneity we have selected the same diameter for each shaft.

5.5 Design of Ground Wheel

As per available space,
Consider,
Diameter of ground wheel=300mm
A=Perimeter of ground wheel=πd
=π×300
=942.86mm
B=plant to plant distance=75mm [10]

C=No. of seed per. revolution of ground wheel

$$=\frac{A}{B}=\frac{942.86}{75}=12.57$$

≈12

D=No. of seed cell=12
E=Gear ratio =1
S=N×G.R×Hd
Perimeter of ground wheel, S=πd,
N=No. of seed cell on seed rotor.
Hd=plant to plant distance.
Hd=12×75=900mm
So approximately our consideration is correct.
And

$$\frac{942}{12}=78.5mm$$

So our standard plant to plant distance =75mm
So our consideration of no. of seed cell=12 is correct.

5.6 Seed Box and Seed Rotor

Seed box=

- Material=PVC
- $\sigma all=8.8\ N/mm^2$
- Seed storage capacity=1.2Kg
- No. of seed rotor for each seed box =7
- No. of seed cell for each seed rotor=12

Seed conductor

- These are the tubes to convey seed from seed box funnel to the furrow under gravity.

Diameter=12mm
Length=750mm

5.7 Design of Thickness of Weld

$\bar{x}=30$
$\bar{y}=05$
A=A1+A2
=60t+60t
=120t
$Ixx=2\times[0+A1(\bar{y})^2]$
$=2\times60t\times5^2$
$=3000t\ mm^4$
$Iyy=2\times(\frac{1}{12})\times l1^3\times t$
$=2\times(\frac{1}{12})\times60^3\times t$
$=36000t\ mm^4$
I=Ixx +Iyy
$=39000t\ mm^4$

$$Td=\frac{P}{A}=\frac{2.6\times10^3}{120t}=\frac{21.666}{t}\ N/mm^2$$

$$r = G\times A =\sqrt{5^2+30^2}=30.41$$

$$T=P.e=2.6\times10^3\times195$$
$$=507000\ \text{N-mm}$$
$$\tau t=\frac{T\times r}{J}=\frac{507000}{34000t}=\frac{395.33}{t}$$
$$\theta=\tan^{-1}(\frac{5}{30})=9.46$$
$$\tau=\sqrt{\tau d^2+\tau t^2+2\tau d\tau t\cos\theta}$$

$$\tau=\sqrt{(\frac{21.66}{t})^2+(\frac{395.33}{t})^2+2\times\frac{21.66}{t}\times\frac{395.33}{t}\times\cos 9.46}$$
$$\tau=\frac{416.71}{t}$$

But,

$$\tau=80\ N/mm^2$$

hence,

$$t=\frac{416.71}{80}$$
$$t=5.20\ \text{mm}$$

Thickness of weld =5.20mm

5.8 Design of C Channel

Load on c channel =13×200=2600=2.6KN

Length of c channel=1.8m

$$UDL=\frac{2600}{Length}=\frac{2600}{1.8}=1.4KN/m$$

For channel,

By Mach lay's method,

$$M=\frac{W\times l^2}{8}$$ ……. for simply supported Beam with UDL

'W'$\frac{KN}{m}$

$$M=\frac{1.4\times0.9^2}{8}=0.14175KNm \quad + A2\times y2$$

$$\bar{y}=\frac{A1\times y1+A2\times y2}{A1+A2}$$

$$\bar{y}=\frac{1800\times15-1352\times13}{(1800-1352)}$$
$$=21.03\ \text{mm}$$

$$I1=\frac{b\times d^3}{12}+(\bar{y}-y)\times A1=\frac{60\times30^3}{12}+(21.03-15)^2\times1500$$
$$=0.29945\times10^6$$

$$I1=\frac{b\times d^3}{12}+(\bar{y}-y)\times A2=\frac{60\times30^3}{12}+(21.03-13)^2\times1352$$
$$=0.163\times10^6$$

$$I= I1 +I2$$
$$=0.03757\times10^6$$

Ye=30-21.03=8.97mm

Yt= $\bar{y}$ =21.03mm

$$\sigma c=\frac{M\times Yc}{I}=16.95 \qquad \sigma c=79.34$$

$$FOS=\frac{Sut}{\sigma c}=\frac{190}{16.95}=11.20$$

Design is safe.

5.9 NUT

$$Tmax=\frac{Sut}{2}=\frac{190}{2}=95\ N/mm^2$$
$$\tau=\frac{P}{A}=\frac{200\times13}{2\times\frac{\pi}{4}\times(d^2)}$$
$$=95\ N/mm^2$$
$$d=4.174\ \text{mm}$$

Selected diameter = d=6mm

$$\tau=\frac{P}{A}=\frac{200\times13}{2\times\frac{\pi}{4}\times(36^2)}=45.97\ N/mm^2$$
$$FOS=\frac{\tau all}{\tau max}$$
$$=\frac{95}{45.97}$$
$$=2.066$$

Design is safe.

V. ADVANTAGES

1) Seed saving in sowing is possible so that the seeds are not wasted: with the use of this machine a farmer can save costly seeds as well as seed remain in seed box is easy to drawn so that seed farmer can utilize in future.
2) Effect of weather: our seed box is not affected by weather because we are use a water resistant PVC material and so it is anti-corrosive.
3) Saves time: It is automatically onion seed sowing machine so it will reduce the broadcasting, transplantation time.
4) Less maintenance: If this machine is used properly then no need of maintenance and if there is no need for replacement of parts except in case any accidental problem in the field.
5) Improvement in yield: by proper operation in the field we are increase the productivity of seed through 5% to 10%.
6) Plant to plant distance: We are maintaining the plant to plant distance by providing a 12 number of cells on rotor.
7) Saving labor cost: The transplantation of onion require lot of labor as well as charge is more so we are by using this machine able to reduce the labor cost.
8) Saving time: the time require for transplantation of onion is more by using this machine we are reduce the time as well as it is very simple.

VI. LIMITATION

1) Cultivation: The quality of the farm is required good so maximum cultivation process required example-plough, Rota etc.
2) Seed box: The onion seed is light in weight as well as delicate so construction of seed box is complicated.

VII. CONCLUSION

Hence after comparing the different method of seed sowing and limitations of the existing machine, it is concluded that the multi-purpose seed sowing machine can

1. Maintain row spacing and controls seed rate.

2. Control the seed and fertilizer depth and proper utilization of seeds and Seed sowing with less loss..

3. Perform the various simultaneous operations and hence saves labor requirement, labor cost, labor time, total cost of saving and can be affordable for the farmers.

As engineers we appreciate how does technology affect our life in a positive way, with huge effects, since the technology and mechanical engineering has demonstrated our new world and we are living in the speed, where time is important everyone everywhere are looking forward to do their business with less effort and short time.

So we develop onion seed sowing machine to save effort and time of human.

REFERANCE

[1] Prof. R.V. Jadhav - Performance evaluation of tractor drawn multicrop planter for sowing of ground nut

[2] Mr. Hase Sunil. [M.P.K.V.](2008-09) – Development and performance evaluation of multicrop planter for low HP tractor (18.5Hp)

[3] Miss Deshpande Shital. .[M.P.K.V.] (2010-11) -Performance Evaluation of Bullock Drawn Light-Weight Jyoti multi crop planter

[4] Design Data-PSG Publication.(page no. 1.1 to 9.7)

[5] Gupta & Khurmi.-Machine Design- (Page no. 150 to 421)

[6] V. B. Bhandari- Design of Machine Elements (Page no. 127 to 558)

[7] Ram Kharche -Food production (Page no. 32 to 58)