Three Phase Four Wire Dstatcom Strategy for Power Quality Improvement Using T Connected Transformer

Dr. S. Prabakaran
Assistant Professor,
EEE Department,
SCSVMV University, Kanchipuram,
Tamilnadu. India
prabakaran110768@gmail.com

T. Saranya
Assistant Professor,
EEE department
Sri Manakula Vinayagar Engineering College
Puducherry
saranyatamizhappan@gmail.com

Dr. P.Ajay-D-Vimalraj
Assistant Professor,
EEE Department,
Pondicherry Engineering College,
Puducherry
ajayvimal@yahoo.com

Dr. M. Sudhakaran
Professor,
EEE Department,
Pondicherry Engineering College,
Puducherry- 605014,
sudhakaran@pec.edu

Abstract— In this paper, an enhanced three-phase four-wire distribution static compensator (DSTATCOM) based on a T-connected transformer is proposed which enumerates the techniques for power quality improvement. Improved Instantaneous Active and Reactive Current Component theory is employed here. This approach significantly compensates reactive power, phase current harmonics and neutral current. Extensive simulation studies have been carried out in MATLAB/Simulink environment to show the efficiency of the proposed compensator, using power system block set toolboxes.

Keywords- *Distribution static compensator(D-STATCOM); neutral current compensation; power quality improvement*

******

I. INTRODUCTION

In places where low-level voltages are used like office buildings, commercial complexes, manufacturing facilities, etc uses three phase four wire distribution system for supplying purposes. Single-phase or three-phase loads are connected to the three-phase four-wire distribution power system [1]. Loads connected to the three-phase four-wire distribution power systems may be adjustable speed drives, lighting ballasts, computer related equipment, automatic office machines, and other power electronic related equipment. Nonlinear input characteristic, which is possessed by most of these loads, creates a problem of high input current harmonics. The high input harmonic current result in serious problems such as damaging electric power components, medical facilities malfunction, and transformer overheats; degrading voltage quality, rotary machine vibration, etc.to the power system which in turn results in pollution. The most serious problem is third harmonic for the single-phase nonlinear loads. Zero-sequence current are regarded as the current of integer multiples of 3rd and these zero-sequence current flowing in the neutral conductor of the three-phase four-wire distribution power system is three times of the zero-sequence components of each phase current [2-5]. Furthermore, the single-phase loads may cause serious load unbalance and these unbalanced load currents which flow in the neutral conductor contain zero- sequence components. In general poor voltage regulation, high reactive power, harmonic current burden, and load unbalancing and excessive neutral current are some of the severe power quality problems which are being faced by three phase four wire distribution systems. The best equipment to solve this problem at minimum cost is by using D-STATCOM, a Custom Power device. A Distribution Static Compensator (DSTATCOM) is connected in shunt with the load .DSTATCOM could be used for reactive power compensation and load balancing in the distribution system. The performance of the DSTATCOM depends on the control algorithms used for the extraction of reference current component. In this paper DSTATCOM has been controlled using improved instantaneous active and reactive current component theory

(IARCC).This paper consists of the following sections: Section II-system configuration, Section III- Operation and control of DSTATCOM, Section IV- Simulation Results, and Section V-Conclusion.

II. SYSTEM CONFIGURATION

Figure.1 shows the schematic diagram of a three phase four wire distribution systems connected with the D-STATCOM. The three phase four wire distribution system is connected to different loads namely linear as well as non linear load. As shown in Figure.1 DSTATCOM is implemented by a three –phase Voltage Source Converter (VSC) which has been operated in hysteresis band control scheme. The reference current generated by the control algorithm are tracked by the controller. As the sum of output currents of the converter is zero for the standard configuration of a three phase VSC, it is not desirable for unbalanced load condition.

The structure of the compensator contains VSC which is connected to the network through a transformer which provides isolation between the converters. Further, it also prevents the dc storage capacitor from being shorted through switches in different converters. It is to be noted that the capacitors must be pre-charged to sufficiently high value in order to obtain satisfactory tracking performance. However, on increase of the capacitor voltage it increases the losses in the system. Therefore the level of the capacitor voltage must been chosen judiciously. Inductance of the transformer has been used to filter out the high-frequency components of the compensating currents. It also controls the switching frequency of the inverter which is limited by the speed of the switching devices and power level. The D-STATCOM is connected as shown in Figure.1 and produces the desired three-phase currents for compensation of (a) positive and negative sequence harmonics in source currents and (b) reactive power of the load [11].

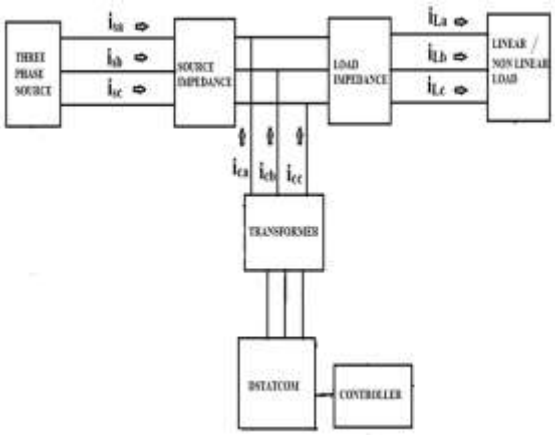

Figure 1. Schematic diagram of three phase four wire distribution system with DSTATCOM

III. OPERATION AND CONTROL OF DSTATCOM

The Distribution Static Compensator (DSTATCOM) is a voltage source converter based static compensator. The DSTATCOM continuously checks the line waveform with respect to a reference ac signal, and therefore, it can provide the correct amount of leading or lagging reactive current compensation to reduce the amount of voltage fluctuations. The major components of a DSTATCOM consists of a dc capacitor, one or more inverter modules, an ac filter, a transformer to match the inverter output to the line voltage, and a PWM control strategy.

The DSTATCOM can be operated for reactive power compensation for power factor correction or voltage regulation. The DSTATCOM injects a current I_c such that the source current is only I_s, and this is in-phase with voltage. The DSTATCOM injects a current I_c such that the voltage at the load (V_S) is equal to the source voltage (V_M), where the transformer is responsible for neutral current compensation. The windings of the transformer are designed such that the mmf is balanced properly in the transformer

A. *Control of DSTATCOM*

The control approaches available for the generation of reference source currents for the control of VSC of DSTATCOM for three-phase four-wire system are instantaneous reactive power theory (IRPT), synchronous reference frame theory (SRFT), unity power factor (UPF) based, instantaneous symmetrical components based, etc .An improved Instantaneous Active and Reactive current component theory is used in this investigation for the control of the DSTATCOM. A block diagram of the control scheme is shown in figure.2 [11].

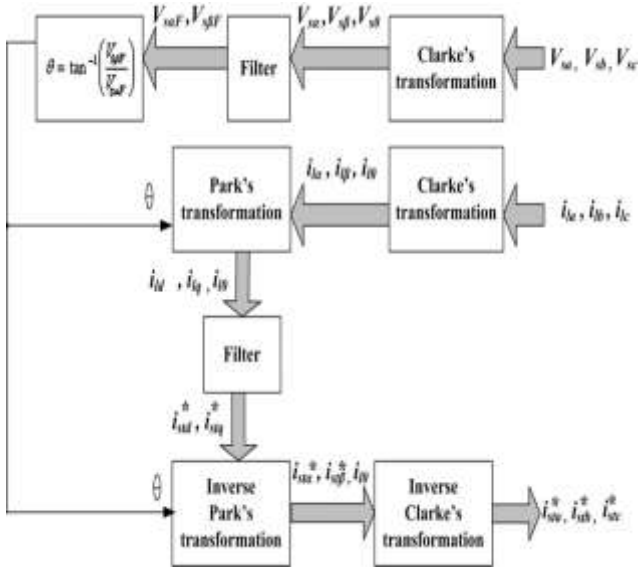

Figure 2. Reference current generator for D-STATCOM.

In this method reference currents are generated through the instantaneous active and reactive current

component of the load. In the same way three phase current component a-b-c will be transformed into α-β-*0* components in stationary reference frame and then it will be rotated by an angle θ in synchronous reference frame based on Park's transformation. The load harmonic and reactive currents are derived by using the measured voltages at PCC (v_{Sa}, v_{Sb} and v_{Sc}), load currents (i_{La}, i_{Lb}, and i_{Lc}), and the dc bus voltage of three-phase inverter. During distorted voltage condition it is found that this method is superior to the instantaneous active and reactive power method.

In this theory the compensating currents are obtained from the instantaneous active and reactive current components of the load. Load currents in stationary reference frame are obtained by an algebraic transformation (Clarke transformation) which involves the *a-b-c* coordinates to the α-β coordinates, followed by the calculation of the transformation angle [11]:

$$\begin{bmatrix} i_{lo} \\ i_{l\alpha} \\ i_{l\beta} \end{bmatrix} = \sqrt{\frac{2}{3}} \begin{bmatrix} \frac{1}{\sqrt{2}} & \frac{1}{\sqrt{2}} & \frac{1}{\sqrt{2}} \\ 1 & \frac{-1}{2} & \frac{-1}{2} \\ 0 & \frac{\sqrt{3}}{2} & -\frac{\sqrt{3}}{2} \end{bmatrix} \begin{bmatrix} i_{la} \\ i_{lb} \\ i_{lc} \end{bmatrix} \quad (1)$$

Source voltages in stationary (α-β) reference frame are obtained by applying Clarke's transformation and given by the following equation:

$$\begin{bmatrix} V_{so} \\ V_{s\alpha} \\ V_{s\beta} \end{bmatrix} = \sqrt{\frac{2}{3}} \begin{bmatrix} \frac{1}{\sqrt{2}} & \frac{1}{\sqrt{2}} & \frac{1}{\sqrt{2}} \\ 1 & \frac{-1}{2} & \frac{-1}{2} \\ 0 & \frac{\sqrt{3}}{2} & -\frac{\sqrt{3}}{2} \end{bmatrix} \begin{bmatrix} V_{sa} \\ V_{sb} \\ V_{sc} \end{bmatrix} \quad (2)$$

In order to calculate the transformation angle, source voltages in stationary reference frame as given by equation [1,2] are filtered by low pass filters. The use of low pass filter makes the strategy more insensitive to harmonics on the mains.

Load currents in rotating reference frame (dq) are obtained by applying Parke's transformation as shown below [11]:

$$\begin{bmatrix} i_{lo} \\ i_{ld} \\ i_{lq} \end{bmatrix} = \begin{bmatrix} 1 & 0 & 0 \\ 0 & \cos\theta & \sin\theta \\ 0 & -\sin\theta & \cos\theta \end{bmatrix} \begin{bmatrix} i_{lo} \\ i_{l\alpha} \\ i_{l\beta} \end{bmatrix} \quad (3)$$

Under balanced and sinusoidal mains voltage conditions, the transformation angle θ is a uniformly increasing function of time. This transformation angle is sensitive to voltage harmonics and unbalance, therefore $d\theta/dt$ may not be constant over a mains period.

Now due to transformation, the direct and quadrature components of voltage are given by,

$$V_d = \left|\overline{V_{dq}}\right| = \left|\overline{V_{\alpha\beta}}\right| = \sqrt{V_{s\alpha F}^2} + \sqrt{V_{s\beta F}^2} \quad \text{and } V_q = 0$$

If d-axis is in direction of the voltage space vector then the transformation is given by equation (6) which is achieved by substituting the following given below in equation (3)

$$\cos\theta = \frac{V_{s\alpha F}}{\sqrt{V_{s\alpha F}^2 + V_{s\beta F}^2}} \quad (4)$$

$$\sin\theta = \frac{V_{s\beta F}}{\sqrt{V_{s\alpha F}^2 + V_{s\beta F}^2}} \quad (5)$$

$$\begin{bmatrix} i_{ld} \\ i_{lq} \end{bmatrix} = \frac{1}{\sqrt{V_{s\alpha F}^2 + V_{s\beta F}^2}} \begin{bmatrix} V_{s\alpha F} & V_{s\beta F} \\ -V_{s\beta F} & V_{s\alpha F} \end{bmatrix} \begin{bmatrix} i_{l\alpha} \\ i_{l\beta} \end{bmatrix} \quad (6)$$

Instantaneous active and reactive load currents can be decomposed into:

$$i_{ld} = \overline{i_{ld}} + \tilde{i}_{ld}$$
$$i_{lq} = \overline{i_{lq}} + \tilde{i}_{lq} \quad (7)$$

The positive sequence component of first harmonic current is transformed into dc quantities which constitute the average current components. All higher order current harmonics including the negative sequence component of the first harmonic current are transformed into non dc quantities and undergo a frequency shift in the spectra. Hence they constitute the oscillatory current components. The fundamental currents of d-q components are now dc values and harmonics are going to appear like a ripple. Harmonic isolation of d-q transformed signal is achieved by removing the dc offset .After eliminating the average current components by filters; the reference compensator currents are obtained as under [11],

$$i_{std}^* = -\tilde{i}_{ld}$$
$$i_{stq}^* = -\tilde{i}_{lq} \quad (8)$$

Therefore the reference currents of the voltage source converter in α-β coordinates are obtained by applying inverse Park transformation and given by the following equation [11]:

$$\begin{bmatrix} i^*_{St\alpha} \\ i^*_{St\beta} \end{bmatrix} = \frac{1}{\sqrt{V^2_{s\alpha F} + V^2_{s\beta F}}} \begin{bmatrix} V_{s\alpha F} & -V_{s\beta F} \\ V_{s\beta F} & V_{s\alpha F} \end{bmatrix} \begin{bmatrix} i^*_{Std} \\ i^*_{Stq} \end{bmatrix} \quad (9)$$

These currents can be transformed in *a–b–c* quantities to find the reference currents in *a–b–c* coordinates using reverse Clark's transformation .The inverse Clarke's transformation is given by [11]

$$\begin{bmatrix} i^*_{sta} \\ i^*_{stb} \\ i^*_{stc} \end{bmatrix} = \sqrt{\frac{2}{3}} \begin{bmatrix} \frac{1}{\sqrt{2}} & \frac{1}{\sqrt{2}} & \frac{1}{\sqrt{2}} \\ 1 & -\frac{1}{2} & -\frac{1}{2} \\ 0 & \frac{\sqrt{3}}{2} & -\frac{\sqrt{3}}{2} \end{bmatrix} \begin{bmatrix} i^*_{l0} \\ i^*_{st\alpha} \\ i^*_{st\beta} \end{bmatrix} \quad (10)$$

Once the load harmonic and reactive currents are calculated, then the next step is to calculate the reference currents for the D-STATCOM by subtracting per-phase neutral current. Since, the neutral current is separated from the compensating currents of D-STATCOM the rating of three phase inverter of the D-STATCOM is reduced

The actual and reference currents of D-STATCOM are compared and a hysteresis controller is used for amplifying the current error in each phase before comparing with a triangular carrier signal to generate the gating signals for the inverter of D-STATCOM.

IV. SIMULATION RESULTS

Although number of power quality improvement schemes using DSTATCOM in three phase four wire system with sinusoidal source voltage conditions has been proposed so far [6] there exists a lot of scope for the improvement especially on three phase four wire distribution system for unbalanced condition. Therefore the proposed approach will be an efficient way to demonstrate it. The VSC based DSTATCOM connected to the three phase four wire system is modeled and simulated using MATLAB/Simulink environment. Control blocks for D-STATCOM are also modeled in MATLAB/Simulink power system block sets. The performance of the proposed scheme has been studied for reactive power compensation, harmonic elimination and neutral current compensation and the results are discussed below. The simulation parameters for the proposed strategy have been listed in table 1

Table 1. PARAMETERS USED IN THE SIMULATION

Parameter	Values
AC Source voltage	Three-phase, four-wire, 230V(rms), 50 Hz
Line impedance	Rs = 0.01 X, Ls = 1 mH
DC bus voltage of D-STATCOM	800 V
DC bus capacitance of DSTATCOM	2000 µF
D-STATCOM coupling inductor	R=0.5Ω,Lac = 6 mH
Linear load	Case1:R_{la}=75Ω, L_{la}=240 mH, R_{lb}=35Ω, L_{lb}=130 mH, R_{lc}=50Ω, L_{lc}=190 mH,Case 2: R_{la}=28Ω, L_{la}=104 mH, R_{lb}=35Ω, L_{lb}=130 mH, R_{lc}=35Ω, L_{lc}=130 mH
Non linear load	Three phase rectifier with R=75Ω, L=1 mH, C=1000µF

A. *Performance of DSTATCOM with linear load under ideal voltage conditions*

The simulation result of the 3P4W distribution power system with linear load under ideal utility voltage conditions is given in Fig. 3. The quantities which are shown are as follows: trace 1 –represents the source voltages (V_{abc}); trace 2 – deals with the source phase currents (I_{abc}); trace 3 – depicts the neutral current (In).

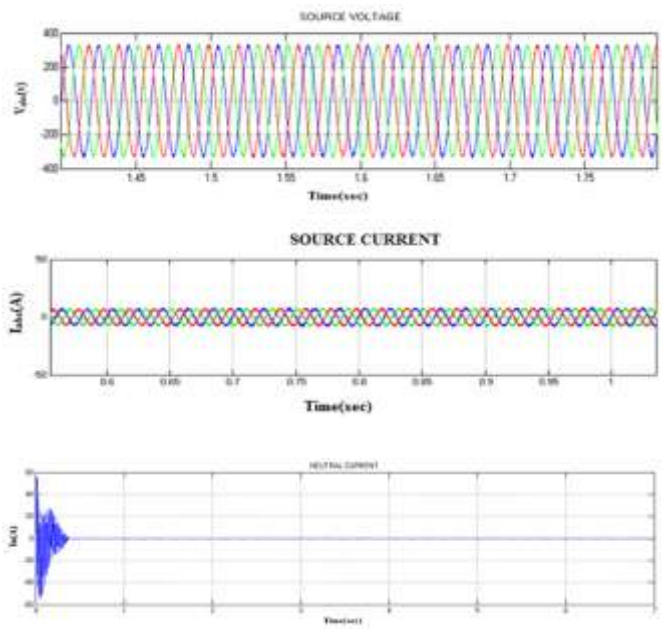

Figure 3.Performance of DSTATCOM under ideal conditions with linear load

B. Performance of DSTATCOM with linear load under unbalanced voltage conditions

The simulation results under unbalanced source voltage conditions are shown in Fig.4. The quantities which are shown are as follows: trace 1 –represents the source voltages (V_{abc}); trace 2 – deals with the source phase currents (I_{abc}); trace 3 –depicts the neutral current (In).

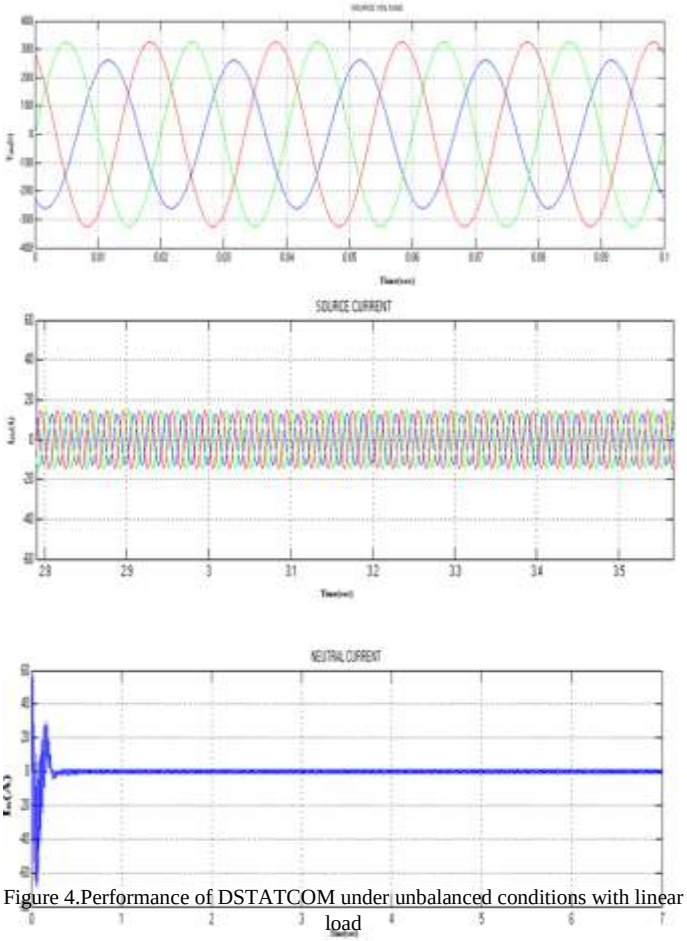

Figure 4.Performance of DSTATCOM under unbalanced conditions with linear load

C. Performance of DSTATCOM with non linear load under ideal voltage conditions

The simulation results under ideal voltage conditions are shown in Fig.5. The quantities which are shown are as follows: trace 1 –represents the source voltages (V_{abc}); trace 2 – deals with the source phase currents (I_{abc}); trace 3 – depicts the neutral current (I_n).

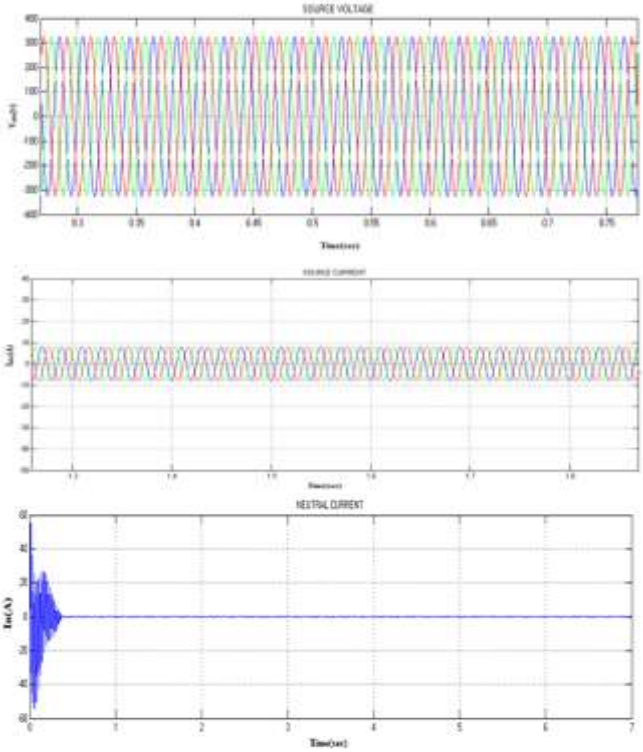

Figure 5.Performance of DSTATCOM under ideal conditions with non linear load

D. Performance of DSTATCOM with non linear load under unbalanced voltage conditions

The simulation results under unbalanced voltage conditions are shown in Fig.6. The quantities which are shown are as follows: trace 1 –represents the source voltages (Vabc); trace 2 – deals with the source phase currents (Iabc); trace 3 –depicts the neutral current (In).

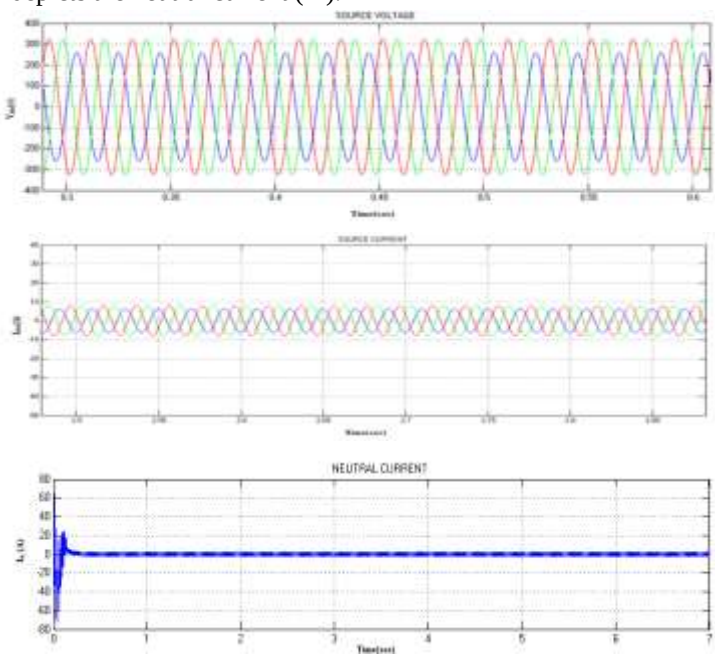

Figure 6.Performance of DSTATCOM under unbalanced voltage conditions with non linear load

TABLE 2.COMPARISON OF THD AT DIFFERENT LOAD CONDITIONS

	Ideal voltage conditions	Unbalanced voltage conditions
Linear load	0.62%	0.26%
Non linear load	2.06%	1.88%

From the table 2.we can observe that the source current THD's at different load conditions are found to be within the IEEE limits using DSTATCOM [5].

VI. CONCLUSION

This paper presents the behaviour of DSTATCOM strategy for managing the power quality in the distribution system. Here linear and non linear loads have been considered and IARCC control scheme is adopted for the DSTATCOM to enhance its performance. The proposed approach is intended for the determination of harmonic reduction, load balancing and reactive power compensation. The test result brings the advantages of DSTATCOM strategy. The better computation efficiency of the proposed DSTATCOM approach shows that it can be applied to wide range of power quality problems.

REFERENCES

[1] Arrillaga J, Watson NR. Power system harmonics. 2nd ed. John Wiley & Sons Ltd.; 2003

[2] Dugan RC, McGranaghan MF, Beaty HW. Electric power systems quality. 2nd ed. New York: McGraw-Hill; 2006.

[3] Sreenivasarao D, Pramod Agarwal, Biswarup Das ,"Neutral current compensation in three-phase, four-wire systems: a review,"Electr Power Syst Res 2012;86:170–80.

[4] Gruzs TM, "A survey of neutral currents in three-phase computer power systems,"IEEE Trans Ind Appl 1990;26(4):719–25

[5] IEEE Recommended Practices and Requirements for Harmonics Control in Electric Power Systems, IEEE Std. 519; 1992.

[6] Singh Bhim, Jayaprakash P, Kothari DP, "A T-connected transformer and threeleg VSC based DSTATCOM for power quality improvement," IEEE Trans Power Electron 2008;23(6):2710–8.

[7] IEEE Guide for Applications of Transformer Connections in Three-Phase Distribution Systems, IEEE C57.105-1978 (R2008).

[8] B. Singh, V. Garg, and G. Bhuvaneswari, "A novel T-connected autotransformer-based 18-pulse AC–DC converter for harmonic mitigation in adjustable-speed induction-motor drives," IEEE Trans. Ind. Electron., vol. 54, no. 5, pp. 2500–2511, Oct. 2007.

[9] Jou H-L, Wu J-C, Wu K-D, Chiang W-J, Chen Y-H, "Analysis of zig-zag transformer applying in the three-phase four-wire distribution power system," IEEE Trans Power Deliv 2005;20(2):1168–73.

[10] D.Sreenivasarao,Pramod Agarwal,Biswarup Das, "A T-connected transformer based hybrid D-STATCOM for threephase, four- wire systems," Electrical Power and Energy Systems 44(2013) ;946-970.

[11] Zaveri Tejas, Bhalja Bhavesh, Zaveri Naimish, "Comparison of control strategies for DSTATCOM in three-phase, four-wire distribution system for power quality improvement under various source voltage and load conditions," Electr Power Energy Syst 2012;43:582–94.

[12] Zaveri Naimish, Chudasama Ajitsinh, "Control strategies for harmonic mitigation and power factor correction using shunt active filter under various source voltage conditions," Electrical Power and Energy Systems2012;42:661–71.

[13] Akagi H, Watanabe EH, Aredes M, " Instantaneous power theory and applications to power conditioning," Hoboken, NJ: Wiley; 2007

[14] Enjeti PN, Shireen W, Packebush P, Pitel IJ, " Analysis and design of a new active power filter to cancel neutral current harmonics in three-phase four-wire electric distribution systems," IEEE Trans Ind Appl 1994;30(6):1565–72.

[15] Singh Bhim, Jayaprakash P, Kothari DP, "Magnetics for neutral current compensation in three-phase four-wire distribution system,"In: conf PEDES;2010. p. 1–7.