Control of Irrigation System Using GSM Technology

R.Revathi
Assistant Professor,
Department of Electrical and Electronics Engineering,
KPR Institute of Engineering and Technology
Coimbatore, Tamil Nadu.
Email: revthir@gmail.com

G.Lokeshwari, V.Priyadarshini, R.Nivetha
UG Scholars
Department of Electrical and Electronics Engineering,
KPR Institute of Engineering and Technology,
Coimbatore, Tamil Nadu.

Abstract— This paper proposes an irrigation system using microcontroller, GSM module and a moisture sensor, which helps in providing an effective and reliable irrigation system, thereby saving the time of the farmers. The microcontroller gets the input from GSM module and moisture sensor to operate the motor and appropriate solenoid valves to feed water only to the preferred area of the agricultural field. The input to the GSM module is given as messages from the farmer. The presence of solenoid valves reduces the number of labour required to be in the field to feed water to individual areas. The farmer can remotely operate the irrigation system and save water by automatically switching off the motor whenever the moisture level of the soil exceeds the critical value. The farmer can also switch off the motor by sending message to GSM module thus providing flexibility.

Keywords— *GSM module; Microcontroller; Moisture sensor; Solenoid valve.*

*****

I. INTRODUCTION

Agriculture plays a vital role in India. Over 58 percent of rural households depend on agriculture as their principal means of livelihood. Economic condition of government, to a large extent depends upon the prosperity of agriculture. India being the second largest producer of food in the world will be facing a situation where farmers are found to quit farming. One of the reasons is the lack of labours to maintain the irrigation system in the agricultural field. This project makes the farmer to remotely control the irrigation system, without any labour to work in the field to maintain proper irrigation system and save water to the maximum. The concept of remote controlled irrigation system with the help of voice commands was designed by Divya et al. [1]. This system was built using GSM with voice recognition technique and moisture sensor unit to control irrigation. Another remote controlled irrigation system was designed and implanted by Chao Long et.al [9]. The system was built with single chip 80C51 module and GTM900C GPRS (General Packet Radio Service) module. A VB (Visual Basic) based temperature and humidity monitoring was also included in the system. A variant system [2] uses an 80C51 microcontroller to control the irrigation scheme with the help of moisture sensors. The GSM based system is further proposed [3] which uses temperature sensors and in addition to it plans the water feeding times for different plants for efficient cropping. The systems are also designed using 8085 microprocessors and GSM technology [11] which enhances drip irrigation.

The above said designs need either the farmer to speak over the mobile phone or go directly to the field to operate the motor switch. The usage of vocal commands might be found easier but the one big difficulty is the mispronunciation of words can cause improper operation of the system. Also the agricultural land is not completely used in all the time, feeding water to the land doesn't requiring water is wastage of the resource. Hence an alternative of this is a simple messaging scheme, which will not be much complex for the user to handle. Our project focuses on the message commands, and using solenoid valves one can control the flow of water only to the preferred area.

The major objectives of the proposed system are low cost and effective with less power consumption using sensors for remote monitoring and controlling devices which are controlled via SMS using a GSM module. This also serves as a less complex system to be handled by the farmer.

II. SYSTEM DESIGN

The proposed irrigation system has the following components.

A. GSM MODULE

A GSM module is a distinguished type of module which accepts a SIM card and operates similar to a mobile phone. Whenever a GSM module is connected to a computer, it allows the computer to use the GSM module to communicate over the mobile network. GSM modules are most frequently used to provide the mobile internet connection; many of them are often used for sending and receiving SMS messages. There are several GSM modules that are available in the market out of which GSM FLYSCALE SIM900 is the GSM module that has been used in this project. This GSM module receives the message from

the User GSM Mobile and decodes it to the corresponding Hexadecimal value and sends it to the Microcontroller. The GSM Module communicates with the microcontroller via the UART port and passes the signal.

B. MICROCONTROLLER

A microcontroller is a computer on chip that is, a single integrated circuit containing a core processor, memory unit, and programmable input/output ports. Microcontrollers are versatile and hence used in places where automatic control of products and devices, such as controlling of automobile engine systems, implantable medical devices, remote controls, toys and other embedded systems. The size and cost of employing a microcontroller is very less than that compared to a design that uses microprocessor whose units are separate such as memory, timer, counter and separate input/output devices, hence in order to achieve required performance at decent cost. ARDUINO UNO microcontroller is used in this project; it is a development kit which helps in easy programming and real time implementation. The kit consists of Atmega 320-PU microcontroller which belongs to the ATmel family; it is a 8-bit Microcontroller that comes as a 28 pin package with 14 digital I/O pins and 6 analog pins. The board features serial communication interfaces, including USB, which helps loading programs from personal computers. In the programming of microcontrollers, the Arduino platform is provides an integrated development environment (IDE) based on the Processing project, which includes support for the C, C++ and Java programming languages. Thus these features make the microcontroller a right choice for our application. Figure 1 shows Arduino Uno board.

Figure 1:Arduino Uno

C. CONTROL UNIT

The control unit is the control relay circuit that operates according to the signal received from the microcontroller and makes the motor to operate and thereby opens the solenoid valves. The relay used in this project is a 12V relay. The relay consists of a coil with multi turns, wound on an iron core, forming an electromagnet. Whenever current passes through it, the coil gets energised, the core gets magnetized temporarily. This magnetized core attracts the armature made of iron. The pivoted armature causes it to operate with one or more sets of contacts. When the coil is de-energized it releases the armature and contacts. The coil can be energized from a low power source such as a transistor while the contacts can switch high powers such as the main supply. The relay can also be situated in a remote area from the control source. Relays generates a very high voltage across the coil when switched off which will damage other components in the circuit. In order to prevent this, a diode is connected across the coil. The diode cathode is connected to the most positive end of the coil.

D. SOLENOID VALVES

A solenoid valve is an electro mechanically actuated valve. The control of this valve is done by an electric current through a solenoid, in our case we use a two-port valve where the flow is either switch on or off that is the microcontroller either gives high or low signal which makes the value to either open or close, flow control cannot be done. The most frequently used control elements in fluidics are the solenoid valves. Solenoids provide fast and safe switching, higher reliability, low control power and compact design. A 2-way valve, for example, when 2 ports; if the valve is open, it means that the two ports are connected and fluid may flow between them and if the valve is closed, the ports are isolated. If the valve is open when the solenoid is energized, then the valve is termed normally open (N.O.).Similarly, when the solenoid is not energized the valve is closed, then the valve is termed normally closed(N.C). A 12V solenoid valve is used to control the flow of water to the field. Since the microcontroller cannot drive a 12V solenoid directly, it is triggered by a relay which gets signals from microcontroller. Figure 2 depicts the operation of the solenoid valve

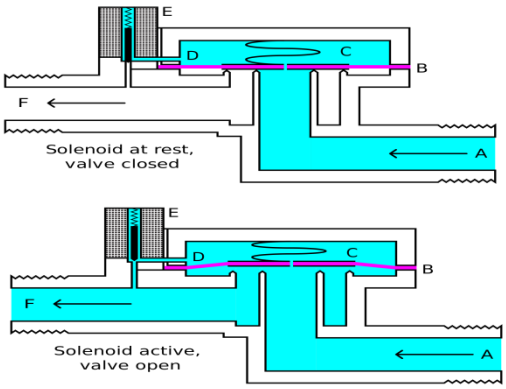

Figure 2: Operation of solenoid valve

Figure 3: Solenoid valve

E. MOISTURE SENSOR

Moisture sensors measure the volumetric water content of the soil. Since the direct gravity based measurement of free soil moisture requires removing, drying, and weighing of a sample, soil moisture sensors measure the volume of water content indirectly by using some special property of the soil, such as resistance, dielectric constant and strength, or neutrons interactions, as a proxy for the moisture content in soil. The relationship between the measured property and soil moisture should be calibrated and may vary depending on environmental conditions like type of soil, temperature, or electrical conductivity. Radiation of reflected microwave is affected by the soil moisture and is used for remote sensing in hydrology and agriculture. Soil moisture sensors typically refer to sensors that estimate volumetric water content. The moisture sensor placed in the agricultural field frequently senses the moisture content of the soil. The critical value of the moisture sensor is set, once the moisture content exceeds the critical value the microcontroller gives the command to the relay circuit to switch off the motor system. The critical value can be adjusted by the farmer according to the crop seeded in the field as the water requirement may vary for different crops seeded.

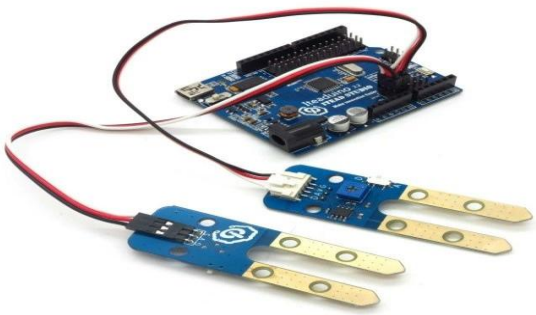

Figure 4: Moisture sensor

F. BATTERY

The battery circuit is essential to operate the moisture sensor and to power the GSM Module, Microcontroller and Solenoid valves.12V, 2AhBatteries are used to provide supply to the above mentioned components in the circuit.

G. MOTOR SYSTEM

The motor system is used to pump the water to the irrigation field.

III. WORKING OF THE SYSTEM

The system works with a GSM FLYSCALE SIM900 module and Arduino Uno microcontroller and a moisture sensor. The system works based on the following algorithm depicted in the flow chart (Figure 5). The command signals from the user are obtained as messages from the user by the GSM module. This GSM module converts the message into hexadecimal code so that the microcontroller could process it. The microcontroller gets the information from the GSM module and moisture sensor frequently. The working of the system can be further understood from the flowchart.

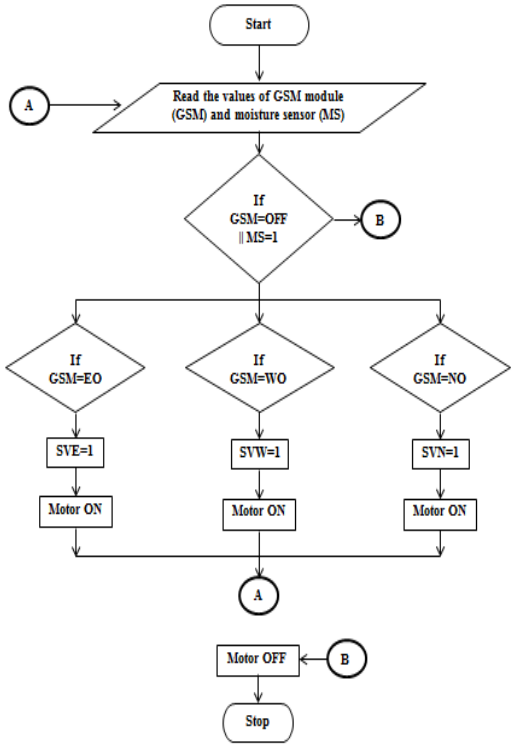

Figure 5: Flow chart of the system

SVE denotes Solenoid Valve located in the East area of the land, similarly SVN and SVW denotes Solenoid Valves located in North and West area respectively.

IV. BLOCK DIAGRAM

The main parts are the microcontroller, GSM module, moisture sensors, solenoid valve, control unit and motor drive system. From the battery, appropriate power to GSM module, microcontroller, solenoid valves and moisture sensors are delivered. The microcontroller receives signal from GSM and moisture sensor, this received command is further used by it to operate appropriate solenoid valves. Whenever the moisture level exceeds the critical value the microcontroller shuts the motor off.

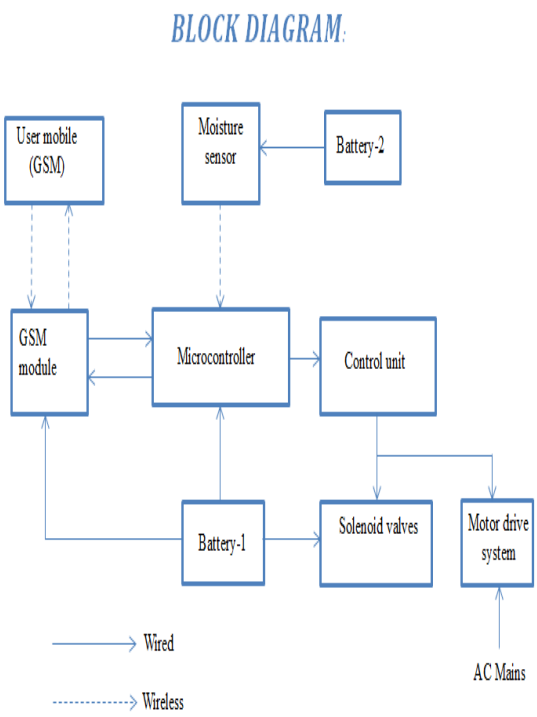

V. CONCLUSION

Thus the system so proposed is very helpful for the farmers in saving the water and reduce their time to reach the field to operate the motor[1]. This system can also reduce the number of labours required to work in the field to change the water flow direction by the usage of solenoid valves. The farmer just has to message the commands from the remote area to control the water fed to the field. The system is more economical and less complex for the farmer to handle. This system can be found much simpler than previously proposed system. The future enhancement can be provided by detecting the fertilizers in the field and controlling the irrigation accordingly.

REFERENCES

[1] V.Divya, A.Umamakeswari, "Smart irrigation technique using vocal commands" International Journal of Engineering and Technology (IJET).

[2] Abhinav Rajpal, Sumit Jain, Nistha Khare , Anil Kumar Shukla "Microcontroller-based Automatic Irrigation System with Moisture Sensors", Proceedings of the International Conference on Science and Engineering (ICSE 2011)ISBN: 978-981-08-7931-0.

[3] Pavithra D. S, M. S .Srinath, "GSM based Automatic Irrigation Control System for Efficient Use of Resources and Crop Planning by Using an Android Mobile", IOSR Journal of Mechanical and Civil Engineering (IOSR-JMCE) e-ISSN: 2278-1684, p-ISSN: 2320-334X, Volume 11, Issue 4 Ver. I.

[4] Vinay Bakale, Siddesh Talokar, "Wireless Automatic Plant Irrigation System" International Journal on Recent Technologies in Mechanical and Electrical Engineering (IJRMEE), ISSN: 2349-7947 Volume: 2 Issue: 4.

[5] Zain-Aldeen S. A.Rhman Ramzy S. Ali Basil H. Jasim, "Wirelessly Controlled Irrigation System", Iraq J. Electrical and Electronic Engineering, Vol. 10 No.2, 2014.

[6] Amit Verma, Ankit Kumar, Avdesh Sikarwar, Atul Sahu, "Automatic Irrigation System Using DTMF",National Conference on Synergetic Trends in engineering and Technology (STET-2014) International Journal of Engineering and Technical Research ISSN: 2321-0869, Special Issue.

[7] S. R. Kumbhar, Arjun P. Ghatule, "Microcontroller based Controlled Irrigation System for Plantation" ,Proceedings of the International MultiConference of Engineers and Computer Scientists 2013 Vol II, IMECS 2013, March 13 - 15, 2013, Hong Kong.

[8] EswaraRao Pandiripalli, Phani Ram Veeramachaneni, Sambhani Madhu Babu, and Jafar Sadik, "Interactive Irrigation System through Mobile with IVR response"IJRET: International Journal of Research in Engineering and Technology, ISSN: 2319-1163.

[9] Choa long, Haiyan Liu, Ping Zhou, "System of remote irrigation system using GPRS", Information Technology Journal 10(5): 1044-1049, 2011, ISBN 1812-5638.

[10] S.V.Devika, Sk. Khamuruddeen, Sk. Khamurunnisa, Jayanth Thota, Khalesha Shaik, "Arduino Based Automatic Plant Watering System", Devika et al., International Journal of Advanced Research in Computer Science and Software Engineering 4(10).

[11] Rashid Hussain, JL Sahgal, Anshulgangwar, Md.Riyaj, "Control of Irrigation Automatically By Using Wireless Sensor Network", International Journal of Soft Computing and Engineering (IJSCE),ISSN: 2231-2307, Volume-3, Issue-1.