Garden Monitoring and Theft Protection

Sandesh Sonawane[1],Sayali Pansare[2] ,Arati Manchekar[3], Rahul Shinde[4]
University of Mumbai
Padmabhushan Vasantdada Patil Prathishthans Collage of Engineering, Mumbai, India

***Abstract**:* The main problems faced by a public garden are theft of important equipments as well as misuse of important resources like water and electricity. So our project deals with the problems faced by any public garden. It consists of an effective theft detection feature which detects if any important equipment of garden gets stolen and controls theft within the garden premises. It provides proper management of watering the plants inside the garden. This avoids wastage of water. Moreover, it reduces unnecessary wastage of electricity which results in efficient consumption and saving of light.

Keyword: *Garden, Moisture sensor, Theft detection, Buzzer, LDR, GSM, 7 Segment Display.*

*****

I. INTRODUCTION

The most important problems faced by a public garden are the misusage of electricity and its wastage. Sometimes due to carelessness of the authorities lamps are left ON which results in wastage of electricity. Irresponsibility of workers results in excess water irrigation which leads to the wastage of water. Precious statues get stolen from the garden premises without being known. Our project helps to overcome all these problems.

II. BLOCK DIAGRAM

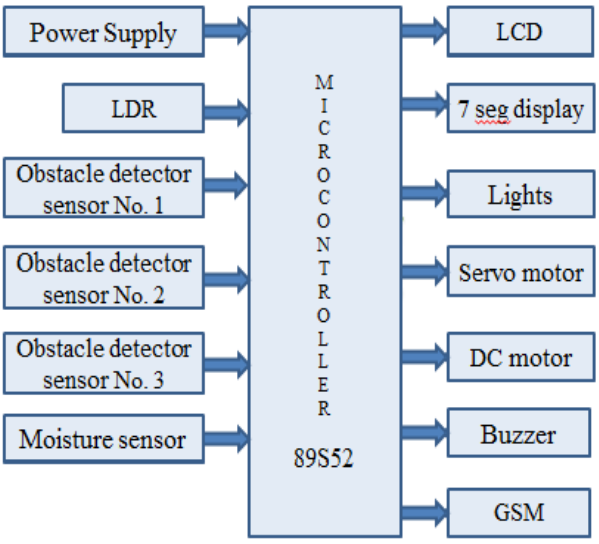

Fig.1 Block Diagram

III. FEATURES

We have developed some features which will solve all the problems faced by the public garden. The features are as follows

A. Theft sensor

If a person happens to touch an important equipment of the garden like a statue, etc ; the garden incharge is notified immediately through a message via GSM module and a buzzer is activated. The important equipments within the garden will be kept under the continuous protection of infrared sensors. An infrared sensor is an electronic instrument that is used to sense certain characteristics of its surroundings by either emitting or detecting infrared radiation. Infrared waves are not visible to the human eye, so an LED is provided for indication. Potentiometer provides range of radiation. The IR sensor continuously emits waves on an object. Until and unless the equipment lies on its place, it receives the IR radiations, hence, the LED glows. So we

get 5V i.e logic 1 is sent to microcontroller. As soon as the object is moved from its place , it does not receive the radiations which gets sensed by the sensor and the LED turns off. So logic 0 is sent to the microcontroller. The microcontroller receives this signal and activates the buzzer as well as a message is sent to the incharge via GSM module.

Fig.2 IR Sensor

B. Automatic gate

The main gate of the garden automatically opens and closes at a specified time in the morning and in the evening respectively. Also, the gate will get closed immediately if the theft occurs within the garden premises.
The Stepper motor is used for opening and closing the gate. A servomotor is a rotary actuator that allows the precise control of angular position, velocity and acceleration. Here, the gate will open and close at the angle of 90 degrees.

Fig.3 Servo motor

C. 7 Segment Display

It keeps a count of number of people present in the garden.
This display will be fixed at the gate. The entrance will be divided into two paths for the people who enter and for the people who leave. Hence, two IR sensors will be fixed for both the paths. IR waves will be continuously radiating from the transmitter of sensor across the path. So logic 0 is sent to the microcontroller.Suppose a person enters, it cuts the path of the radiating wave. This discontinuity gets sensed by the receiver and it sends logic 1 to the microcontroller . So the count is increased or decreased accordingly by the microcontroller which gets displayed on the single 7 segment display.

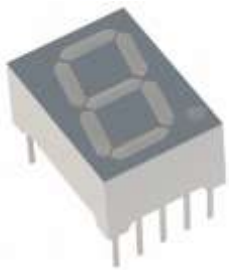

Fig.4 Seven Segment Display

D. Moisture Sensor

This sensors will be fixed on the land near the plants. It senses the moisture present in the land. If the moisture is detected to be less, the water motor is signalled to supply water in that area.

Fig.5 Moisture Sensor

If the ground happens to be damp, continuity is obtained i.e logic 1 is sent to the microcontroller. This concludes that sufficient water is already available for plants. Hence, wiper motor is not signalled.

Now if the ground has no water within, continuity will not be obtained. So logic 0 is sent to the microcontroller . This states that plants require water. Hence, DC motor is signalled to provide water wherever required.

Fig.6 Wiper motor

E. Automatic Lights ON/OFF

It automatically turns the lights on and off at the specified time in the evening and in the morning respectively.

Fig.7 LDR

It uses a Light Depending Resistor whose resistance increases with the increase in light intensity. In the evening the LDR senses the light intensity to be less, so, the microcontroller is programmed to turn ON the street lights as it receives logic 0. Similarly, in the morning the lights are turned OFF as the light intensity detected by the LDR is more.

F. LCD

Fig.N LCD

It displays a message whenever any of the activities is carried out by the Automatic gate, Theft sensor, Street lights, 7 segment display and Moisture sensor. It is controlled by microcontroller.

IV. COMPONENT LIST

TABLE I: COMPONENT LIST

Sr. No.	Name	No.
1	Gsm module	1
2	LDR	1
3	7 Segment Display	1
4	IR Sensors	3
5	LCD	1
6	Moisture Sensor	1
7	DC Motor	1
8	Servo Motor	1

V. CONCLUSION

Thus implementing this project leads to efficient consumption of electricity and saving of water as well as effective protection from thieves. Advantages of the project are :

A. Electricity Consumption

As the street lights in the garden are turned off automatically when not required, it leads to low consumption of electricity.

B. Water management

Water is utilised efficiently due to the moisture sensor. Hence this results in saving the water.

C. Security

It provides high security as the thieves can be easily caught and the precious equipments can be protected.

D. Automated system

It is a fully automated system as no human attention is needed.

VI. REFERENCES

[1] Indoor Radio Planning: A Practical Guide for GSM, DCS, UMTS, HSPA and LTE,2nd Edition Morten Tolstrup ISBN: 978-0-470-71070-8 480 - July 2011 –Wiley
[2] Vijay K. Garg, “Wireless Communication and Networking”, Morgan –Kaufman Series in Networking—Elsevier
[3] M. Ghavami, L. B. Michael and R. Kohno, “Ultra Wideband Signals and Systems In Communication Engineering”, 2nd Edition, John Wiley & Sons, NY, USA, 2007.
[4] Donald A Neamen,”ELECTRONICS CIRCUITS ANALYSIS AND DESIGN, Edition 2007, Chapter 6, Page No:369- 449.
[5] B.L.Theraja & A.K. Theraja, Electrical Technology Vol. I & II, Edn. 23, published by S.Chand & Co. Ltd.