International Journal on Recent Technologies in Mechanical and Electrical Engineering (IJRMEE) ISSN: 2349-7947
Volume: 2 Issue: 3 001– 007

Simulation & Hardware Development of Single Phase Sinusoidal Pulse Width Modulation (Unipolar) Inverter

Sachin Maheshri[1], Prabodh Khampariya[2]

[12] *Sri Satya Sai University of Technology & Medical Science, Sehore M.P.*
Email: *sachinmaheshri@gmail.com, khampariya5@gmail.com*

Abstract— In this paper, Simulation & Hardware development unipolar Sinusoidal Pulse Width Modulation switching strategy is presented for single phase full bridge inverter. The main advantage of this approach is that it does not required additional circuit for produced inverter's dead time. To obtain the unipolar Sinusoidal Pulse Width Modulation switching pulses generated with carrier frequency of 1to 2 kHz & the modulation ratio change from 0.4 to 0.7 by varying amplitude of modulating signal. In the unipolar single phase SPWM microcontroller-based 300VA inverter is designed and tested for fixed M.I=0.6 with unipolar voltage switching. The waveforms of gate pulses are observed on DSO, The outputs voltage and current %THD waveforms for variable AC voltages and fixed modulation index are observed on scope, and also see the THD. The PWM inverter is the main choice in power electronic for recent years, because of its circuit simplicity and rugged control scheme Sinusoidal Pulse Width Modulation switching technique is commonly used in industrial applications.

Keywords*-Sinusoidal pulse width modulation (SPWM), Unipolar, Total Harmonic distortion (THD). Pulse Width Modulation (PWM), Modulation index (MI).*

I. INTRODUCTION

An inverter is basically a device that converts electrical energy of DC form into that of AC. The purpose of DC-AC inverter is to take DC power from a battery source and converts it to AC. The inverter receives DC supply from 12V or 24V battery and then inverter converts it to 230V AC with a desirable frequency of 50Hz. These DC-AC inverters have been commonly used for industrial applications such as uninterruptible power supply (UPS), AC motor drives. In addition to this, the control strategies used in the inverters are also similar to those in DC-DC converters. Both current-mode control and voltage-mode control are employed in practical applications.[1,3]

A voltage source inverter (VSI) employing thyristor as switches, some type of forced commutation is required, while the VSI made up of using GTOs, power transistors, power MOSFETs. A standard single-phase voltage or current source inverter can be in the half-bridge or full-bridge configuration. Some industrial applications of inverters are for adjustable-speed ac drives, UPS (uninterruptible power supplies) for computers, HVDC transmission lines, induction heating, standby aircraft power supplies etc.[2,1]

II. Pulse Width Modulation (PWM) Technique in Inverter

The Modulation Process is Included in Inverter for Switching. A basic of Pulse Width Modulation (PWM) Technique is as.

There are many forms of modulation used for communicating information. When a high Frequency signal has amplitude varied in response to a lower frequency signal we have AM (amplitude modulation).When the signal frequency is varied in response to the modulating signal we have FM (frequency modulation. These signals are used for radio modulation because the high frequency carrier signal is needs for efficient radiation of the signal. When communication by pulses was introduced, the amplitude, frequency and pulse width become possible modulation options. In many power electronic converters where the output voltage can be one of two values, the only option is modulation of average conduction time.

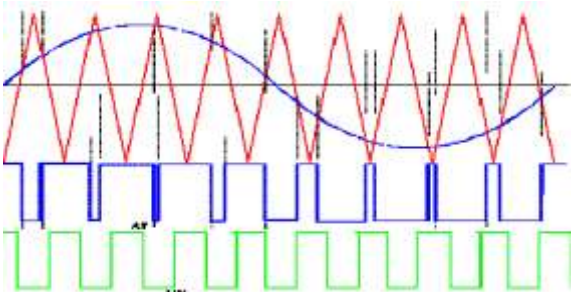

Fig.1 Sine Modulated,Unmodulated Signal

The Pulse Width Modulation (PWM) is a technique which is characterized by the generation of constant amplitude pulse by modulating the pulse duration by modulating the duty cycle. Analog PWM control requires the generation of both reference and carrier signals that are feed into the comparator and based on some logical output, the final output is generated. The reference signal is the desired signal output maybe sinusoidal or square wave, while the carrier signal is either a saw tooth or triangular wave at a frequency significantly greater than the reference.[1,8]

In many industrial applications, it's often required to control the output voltage of inverters for the following reasons

- To cope with the variations of DC input voltage.
- For voltage regulation of inverters.
- For the constant volts/frequency control requirement.

There are various techniques to vary the inverter gain. The most efficient method of controlling the gain (and output

voltage) is to incorporate pulse width modulation (PWM) control within the inverters. The commonly used techniques are. There are five basic PWM techniques:

1. Linear modulation
2. Saw tooth PWM
3. Single Pulse Width Modulation
4. Multiple Pulse Width Modulation
5. Sinusoidal Pulse Width Modulation

III. Sinusoidal pulse width modulation (SPWM)

Instead of, maintaining the width of all pulses of same as in case of multiple pulse width modulation, the width of each pulse is varied in proportion to the amplitude of a sine wave evaluated at the centre of the same pulse. The distortion factor and lower order harmonics are reduced significantly. The gating signals are generated by comparing a sinusoidal reference signal with a triangular carrier wave of frequency Fc.The frequency of reference signal Fr ,determines the inverter output frequency and its peak amplitude Ar,controls the modulation index M,and Vrms output voltage VO.The number of pulses per half cycle depends on carrier frequency .

Inverters that use PWM switching techniques have a DC input voltage that is usually constant in magnitude. The inverters job is to take this input voltage and output ac where the magnitude and frequency can be controlled. There are many different ways that pulse-width modulation can be implemented to shape the output to be AC power. A common technique called sinusoidal-PWM will be explained. In order to output a sinusoidal waveform at a specific frequency a sinusoidal control signal at the specific frequency is compared with a triangular waveform . The inverter then uses the frequency of the triangle wave as the switching frequency. This is usually kept constant.[7]

The triangle waveform, v_{tri}, is at switching frequency fs; this frequency controls the speed at which the inverter switches are turned off and on. The control signal, $v_{control}$, is used to modulate the switch duty ratio and has a frequency f_1. This is the fundamental frequency of the inverter voltage output. Since the output of the inverter is affected by the switching frequency it will contain harmonics at the switching frequency. The duty cycle of the one of the inverter switches is called the amplitude modulation ratio, m_a.[5]

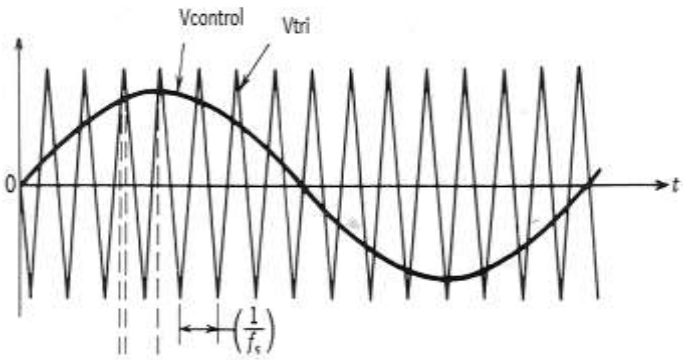

Fig.1.1Desired Frequency is Compared with a Triangular Waveform.

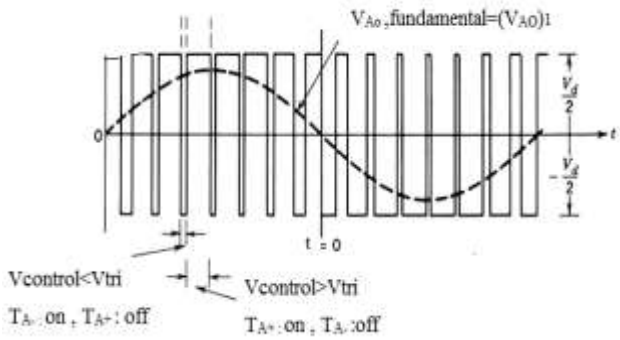

Fig.1.2 Pulse-width Modulation (PWM)

Vcontrol<Vtri
T_{A-} : on, T_{A+}: off
Vcontrol>Vtri
T_{A+}: on, T_{A-} : off
$V_{Ao,\ fundamental}$= (V_{AO})

$$m_a = \frac{V_{control}}{V_{tri}}$$

Where V control is the peak amplitude of the control signal

$$v_{control} > v_{tri} \quad \text{Ta\_pos is on,} \quad v_A = \frac{V_d}{2}$$

$$v_{control} < v_{tri} \quad \text{Ta\_neg is on,} \quad v_A = \frac{-V_d}{2}$$

$$m_f = \frac{f_s}{f_1}$$

The switches Ta+ and Ta- are controlled based on the comparison of Vc_{ontrol} and V_{tri} .The two switches are never off at the same time which results in the output voltage fluctuating between +/- $V_d/2$.

In order to fulfill the requirement, the new switching technique had been analyzed and recommended in this project, namely SPWM which is generated by PIC microcontroller. The various frequency triangular carriers with different amplitude modulation ratio SPWM signal had been programmed and tested in single phase inverter circuit in order to find the best switching signal.[1,5]

- Switching Losses.
- Utilization of Dc power supply that is to deliver a higher output voltage with the same DC supply.
- Linearity in voltage and current control.
- Harmonics contents in the voltage and current.

IV. .HARDWARE SYSTEM DEVELOPMENT

The hardware design for the inverter including PIC microcontroller circuit, H-bridge Inverter circuit and MOSFET

driver. The system consists of microcontroller circuit for generating SPWM pulses, optoisolator or isolation circuit, gate drivers, inverter circuit or full bridge circuit, filter circuit and step up transformer. SPWM signal generated by microcontroller needs to be isolated for protection and safety between a safe and a potentially hazardous environment. The outputs are then fed to gate drivers which contains four independent electrically-isolated MOSFET drivers. The outputs of the gate drivers are then distributed to power switches in full bridge arrangement. The output of the inverter has square waveform due to the switching pattern. In order to get a sine wave signal the LC filter was used to reduce harmonic content. The output then fed to step up transformer to get the required output level.[4,1]

Block Diagram of Hardware System

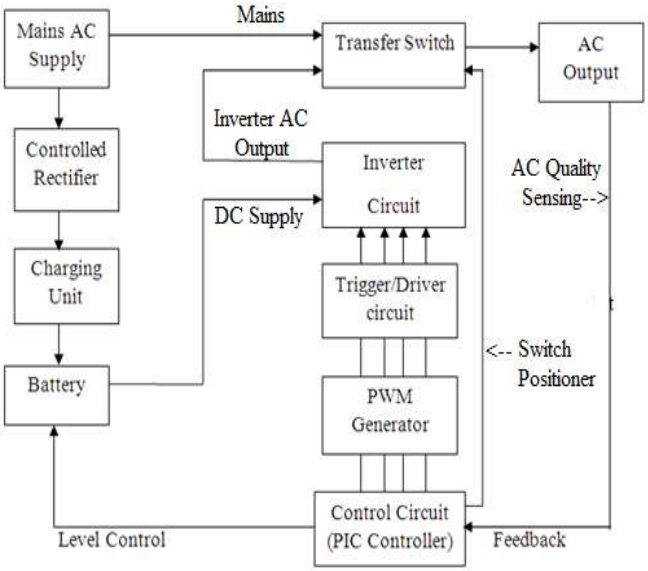

Fig.1.3 Block Diagram of the SPWM Inverter

a) **Mains AC Supply** :The AC Line block represents an ac input. This input will be a 220V 50 Hz ac signal, This will drive the circuit and charge the battery.

b) **Chargering Unit**: The battery charger is an ac-dc converter that will supply the battery with a dc voltage so it remains charged. While the ac line is powered the charge will complete this conversion. If power to the ac line is lost the charger will remain idle until power is restored, and it will continue charging the battery.

c) **Battery:** The battery will be a 12V, 70AH/100AH/150AH/180AH battery. From battery the dc power will be converted to ac to support the electronic devices.

d) **Inverter:** The inverter will change the dc power from the battery to ac power. It will convert the dc voltage to an approximate 230V ,50Hz sinusoidal signal.

e) **Positioner Switch:** The switch will take the information from the Controller and limit when it is possible to switch between the ac line and the back-up system. When the timing is correct the switch will change the input to the motor.

f) **Load:** Our ac load will be a variable type resistive load i.e Incandescent lamps.

g) **PWM Generator Circuit:** The basic single phase full bridge inverter topology shown in Figure 1.3 The control strategy is performed in such away a pair (S11 & S22) of switches is turn on during another pair (S12 & S21) is turn off. In this application, when a pair (S12 and S21) turn on the other pair (S11 and S22) is automatically turn off. The sequences of on and off of the switches occurred continuously and sequentially. This produces an alternating output voltage across the load.

Hardware of proposed system & setup with load.

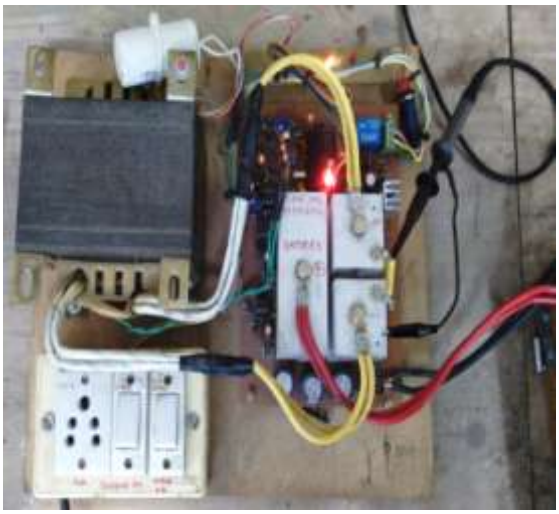

V. *V.*SOFTWARE DEVELOPMENT IN MATLAB

a) Simulink Model of Unipolar Voltage Switching

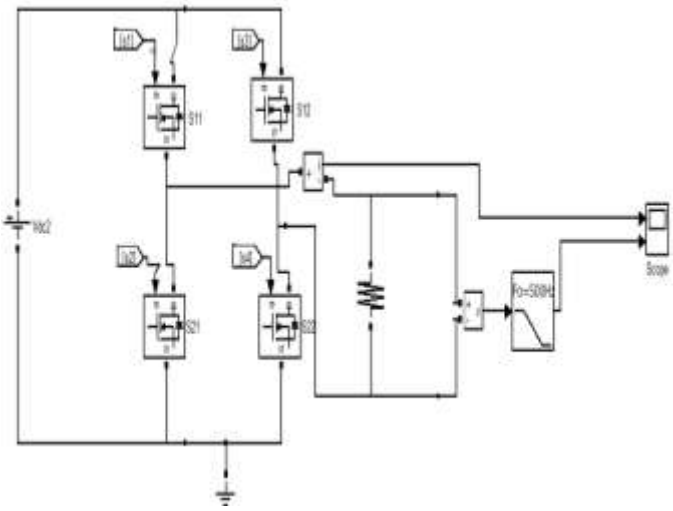

Fig.1.4 Simulink Model of Unipolar Voltage Switching

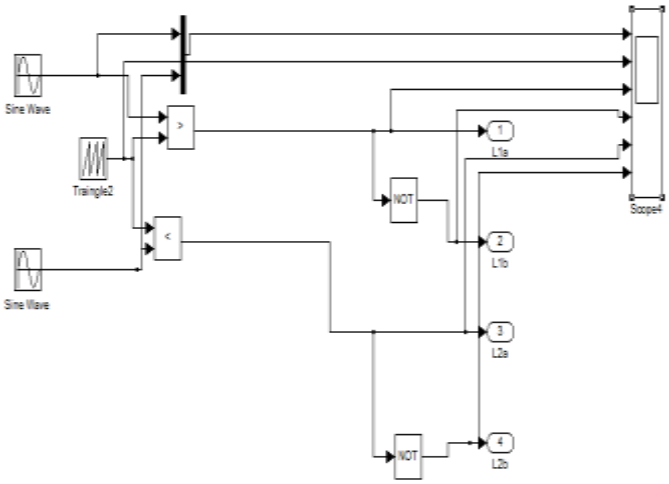

Fig.1.5 SPWM Pulse Generator Circuit

b) Gate Pulses Generation for Unipolar Voltage Switching

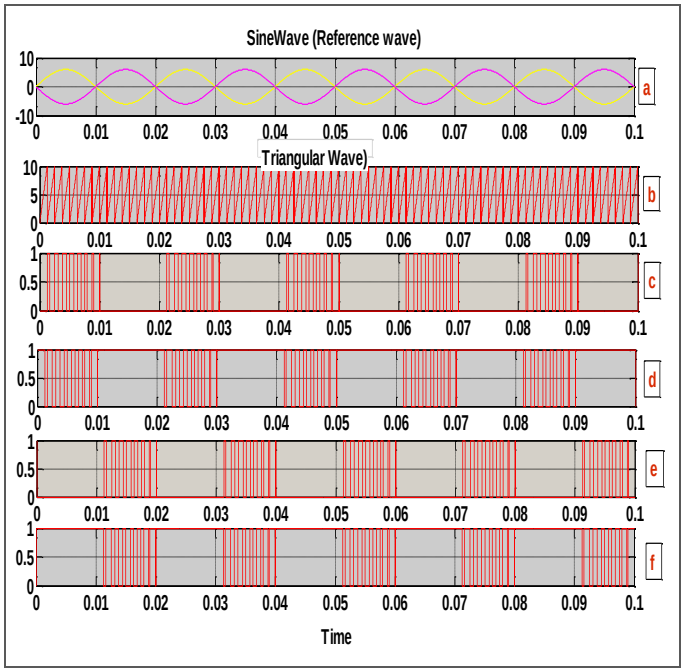

Fig.1.6 Waveforms for SPWM with Unipolar voltage switching (a) Reference waveforms (b) Triangular waveform,(c),(d),(e),(f)gating pulses for S11 ,S12 ,S21 and S22.resp.after sine and triangular wave comparison.

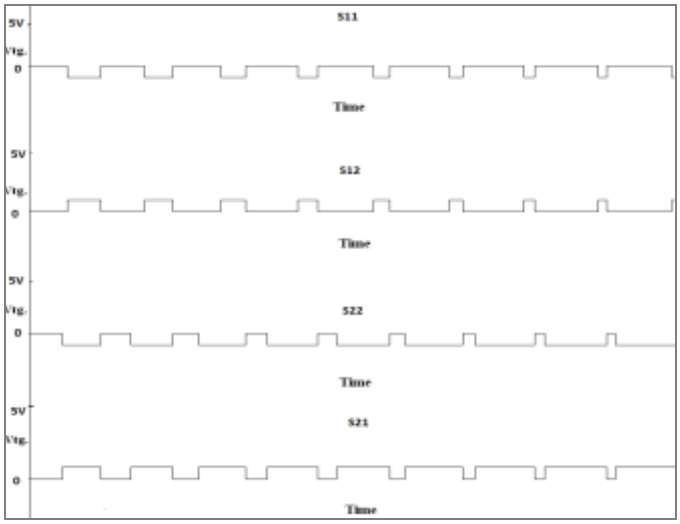

Fig 1.7 Gating Pulses for S11, S12, S22 and S21.

VI. .ALGORITHM

Hardware Algorithm for generating Unipolar Sinusoidal Pulse Width Modulation.

For generating Sinusoidal Pulse Width Modulation. we have chosen microcontroller PIC 16F872/77A for unipolar. Basically we have studied about the detailed information about microcontroller and the mechanism of generating PWM.

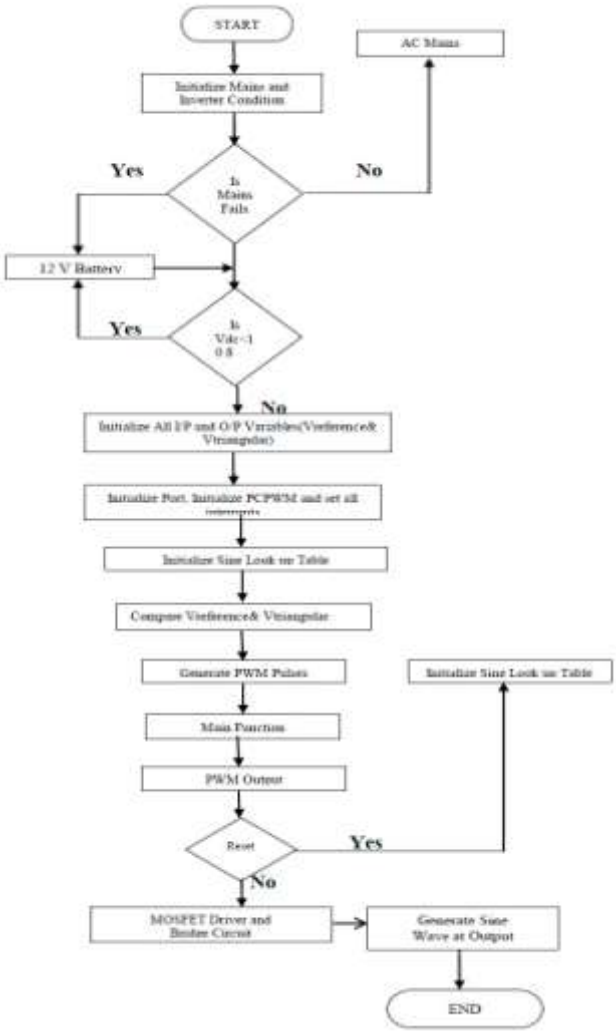

Above Figure shows the Algorithm for generating of single phase sinusoidal PWM signal. In this ware by which the ports work as output ports. It Generate PWM. Here first Initialize Mains and Inverter Condition (Mode).Then It check availability of mains, if Mains fail then it goes to 12V battery and then start inverter mode. In next it check battery voltage(Vdc),if it is less than 10.8V it again goes to 12V battery. If it is greater than 10.8V goes to next and Initialize All input and output Variables (Vreference & Vtriangular)"initialize variables" means initialize the user defined memory cell, "initialize port" initializes the ports in software by which the ports work as output ports. Those sampling value will go in PDC(Peripheral DMA Controller) Register, and the PTMR register will generate the Triangular wave. after comparison of these signals will generate sinusoidal PWM signal with dead time. The microcontroller checks whether the generation is completed or not, if yes, take another sampling of the sine wave table, if not, it waits until completion. [1,6,3]

VII. Conclusion

The electronic devices is smaller in sizes, therefore the efficiency of power supply used in electronic devices should be upgraded from time to time. The different switching techniques and switching elements were used in single phase inverter also considered when inverters become the best power supply for converting DC power to AC power. Based on studied, Sinusoidal Pulse Width Modulation techniques is a common method used in single phase inverter circuit are Unipolar voltage Switching. For 300 VA the voltage and current is noted on different sets of resistive load. It is observed that it results maximum efficiency for 300W load upto 90% in hardware. The simulation of the single-phase unipolar voltage switching inverter device model is simulated in Matlab/Simulink. The pulses waveforms observed on Digital Storage oscilloscope.

VIII. Result & Observations

a)Software output results.

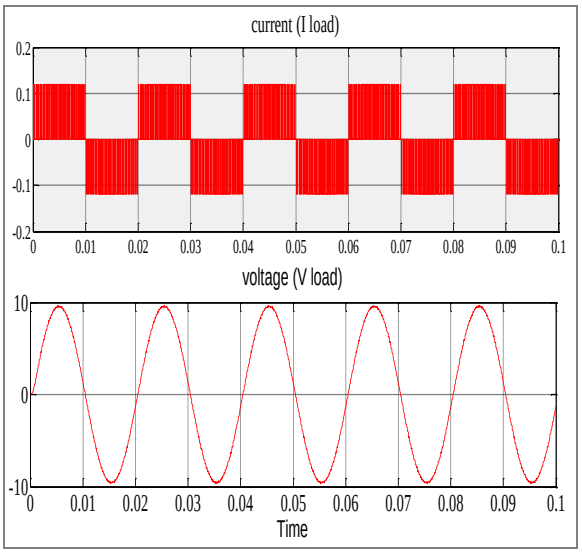

Fig 1.8 Output voltage and current waveform of Unipolar Voltage Switching without filter

ISSN: 2349-7947
001– 007

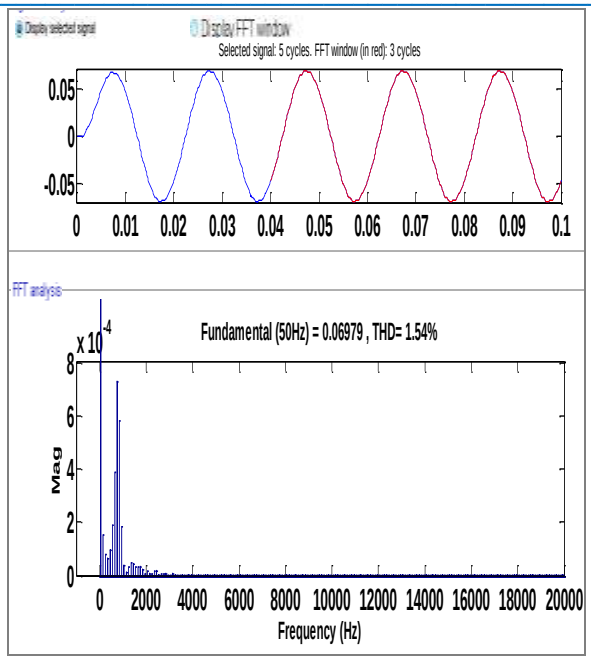

Fig.1.9 PWM Signal of Implementation Result

b) Hardware output results

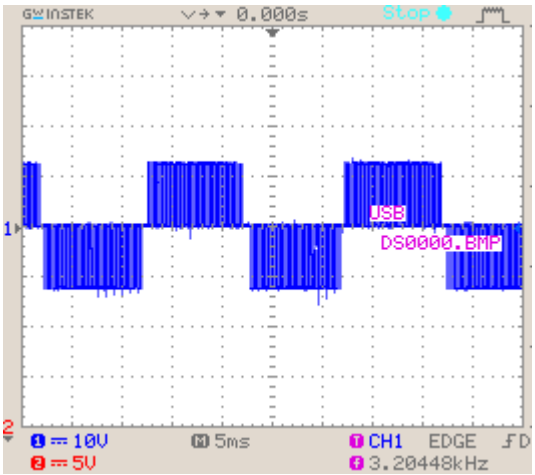

Fig.1.10 PWM Signal of Implementation Result

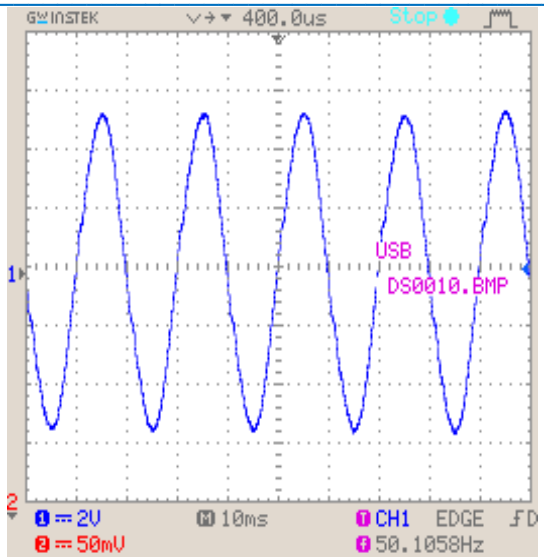

Fig.1.11 Output Waveform for Unipolar Voltage Switching

Observation table

LOAD (W)	V_{in} (V)	I_{in} (A)	P_{dc} (W)	V_{out} (V)	I_{out} (A)	P_{ac} (W)	EFF. (%)
40	12	3.84	45.72	220	0.1	22	48
60	11.93	5.23	62.23	220	0.2	44	70.7
100	11.9	8.48	100.91	218	0.3	65.4	64.81
140	11.82	11.73	138.64	218	0.6	130.8	94.34
160	11.78	13.57	159.85	218	0.64	139.52	87.28
200	11.7	16.97	198.54	218	0.81	176.58	88.93
240	11.61	20.64	239.63	218	1.02	222.36	92.79
260	11.57	21.77	251.87	217	1.1	238.7	94.77
300	11.47	26.16	300.05	217	1.25	271.25	90.4

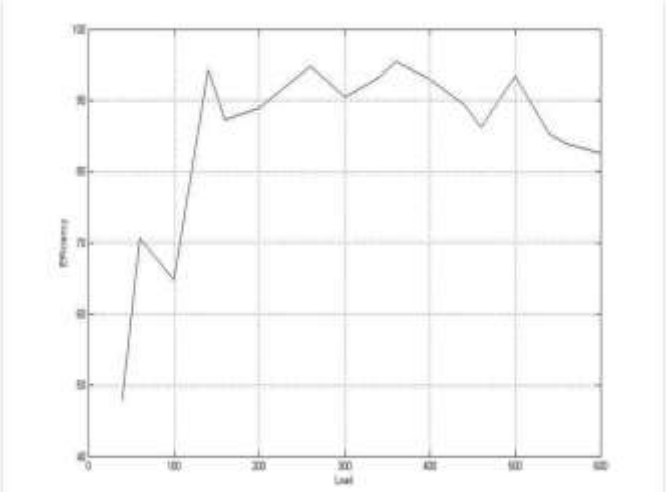

Fig.1.12 Graph of load Vs Efficiency

References

[1] Pankaj H Zope, Pravin G.Bhangale, Prashant Sonare ,S. R.Suralkar "*Design and Implementation of carrier basedSinusoidal PWM Inverter*", International Journal of Advanced Research in Electrical, Electronics and Instrumentation Engineering, Vol. 1, Issue 4, October 2012 ISSN: 2278 - 8875

[2] Anand. D & Jeevananthan .S "*Modeling and Analysis of Conducted EMI Emissions of a Single-Phase PWM* Inverters" Asian Power Electronics Journal, Vol. 4, No.3 December 2010.

[3] B.Geetalaxmi and P.Dananjayan, " A Multipulse – Multilevel Inverter Suitable for High Power Application",International Journal of Computer and Electrical Engineering,Vol.2 No.2.April,2021 pp-257-261.

[4] J. Kim, J. Hong, K. Nam " A Current Distortion Compensation Scheme For Four-switch Inverters", IEEE Transactions on Power Electronics, Vol. 24, No. 4, April 2009, pp. 1032 – 1040

[5] International Journal of Engineering Science and Technology Vol. 2(11), 2010, pp.6500-6506. Pardasani Hitendra K,Arora Kapildev N, "Simulation Of Three Level Inverter Using Sinusoidal Pulse Width Modulation Technique By MATLAB". National Conference on Recent Trends in Engineering & Technology, B.V.M. Engineering College, V.V.Nagar,Gujarat,India, 13-14 May 2011.

[6] Mahesh A. Patel, Ankit R. Patel, Dhaval R.Vyas and Ketul M. Patel, "Use of PWM Techniques for Power Quality Improvement", International Journal of Recent Trends in Engineering, Vol. 1, No. 4, May 2009.pp.99-102.

[7] C. R. Balamurugan, S. P. Natarajan, V. Padmathilagam, "Comparative Study on Unipolar PWM Strategies for Three Phase Five Level Cascaded Inverter" European Journal of Scientific Research ISSN 1450-216X Vol.80 No.4 (2012), pp.517-539.

[8] Khanniche, M.S., "A novel switching strategy of a single phase micro controlled UPS system ", Electrotechnical Conference, 1991. Proceedings., 6th Mediterranean Publication Year: 1991 , vol.2 pp. 1360 – 1362.