MIMO Based Transceiver System for Unmanned Ground Vehicle for Surveillance In War Field

M. Praveen Kumar[1], Dr. G. K. D. Prasanna Venkatesan[2]

PG Scholar[1], Professor[2]

Department of Electronics and Communication Engineering, SNS College of Engineering, Coimbatore

Abstract:

Unmanned ground vehicle is an autonomous vehicle that mainly capable to do tasks independent of humans. Automated vehicle works during off road navigation and mainly used in military operations. The radio environment on electrically small platforms is changing rapidly. In order to support high speed audio and video, processing needs higher data rates concerned with sending and receiving data packets. To create a prototype designed to accurately estimate the value of potential security vulnerabilities in unmanned platforms to strengthen security against the Army personnel using MIMO concept.

Key Terms: *Multi input multi output (MIMO), Unmanned Ground Vehicle (UGV), data transmission speed, radio frequency (RF).*

INTRODUCTION:

An unmanned ground vehicle (UGV) is actively being developed for both civilian and military use to mainly perform dirty and dangerous activities. UGVs are the focus of many research projects for both military and civilian applications and the UGVs are used in different kind of applications like security service, riot control, military, surveillance, hostage situation, police, border patrol and law enforcement the related examples are explosives and bomb disabling vehicles. Requirements towards varying capability of designing Unmanned Ground Vehicles are today saving lives and also prove critical supporting capabilities in military operations worldwide [1]. UGV's work more effectively in Environmental conditions where heat, cold, or nuclear, chemical and biological contamination in the warfare. Therefore, UGV can be used to augment the soldiers' capability in the field of military operations. In general, an UGV is controlled by a human operator at a remote location through communications link. Overall cognitive processes are provided by the operator based upon sensory feedback from either line-of-sight visual observation or remote sensory input such as video cameras. Using the multiple sensor of UGV [3], the ability to directly obtain and view critical information are provided to the operators in a timely manner, and to obtain this information from areas that would be considered to be high risk before the advent of UGVs. Wireless technology is one of the main areas of research in the world of communication systems today and a study of communication systems is incomplete without an understanding of the operation and fabrication of antennas. The design and simulation of MIMO antenna is implemented for the improvement of communication performance, both the transmitter and receiver end uses the multiple antennas in order to provide multi-input multi-output function; using the MIMO concept significant increase in data throughput and link range without additional bandwidth. It uses the advanced antenna diversity schemes, spatial diversity/ multi access systems.

UNMANNED GROUND VEHICLE

A remote-operated UGV is a vehicle that is controlled by remote control station with a communication link [2]. UGV should capable of sending and receiving telemetry and sensor data, video/audio to remote control station, as well as interacting with an environment where the UGV is capable of autonomous driving based on waypoints and basic obstacle avoidance, and capable of driving controlled

by human interface from far away [4]. For this we develop the UGV for autonomous moving using a variety of sensing techniques. The proposed UGV consists of many sophisticated-designed systems such as navigator, obstacle detection sensory devices

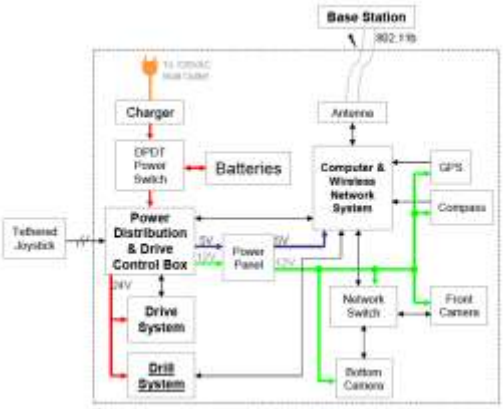

Fig 1.1 Block diagram of the UGV

incorporated, wheel activator for controlling the vehicle and network device for communication between UGV and remote control station [5].

Existing System:

UGV are classified into two types based on its operation,

- Remote operated
- Autonomous operated

The remote operated UGV needs human help to operate via communication link. All the operation carried out is observed by means of direct visual observation or sensory operation [7]. An autonomous vehicle which can operate without human intervention takes decision by itself and it also has the ability to learn the outer environment conditions independently.

The environment conditions are sensed by means of various sensors fitted over vehicle [10]. It take decision of its own and sends information to the human operator here it uses the antenna to connect over a network via base station. The front and back connected cameras send information simultaneously to the human operator where it needs more data rate to transmit data over the channel [9]. The system using the normal transceiver is capable of delivering the packets with some delay and loss in data packets.

MIMO FOR RELIABLE MILITARY AND SURVEILLANCE PURPOSE:

MIMO wireless systems have antenna arrays at both the transmitter and receiver terminals. The requirements of the antenna element at the terminal are as yet not well-defined but will include (for commercial reasons) low volume [8], low antenna profile, light weight and cheap while maintaining good electrical properties such as return loss and isolation (-20dB)[6]. The pattern coverage for a terminal should be as omni-directional as possible since the location of the base station is unknown., but the patterns are subjected to direct energy away from the circuit board of the device, i.e. laptops, PDAs and handsets, so that electromagnetic interference (EMI) is reduced.

NEED FOR MULTIPLE ANTENNAS:

The radio environment on electrically small platforms is changing rapidly. Until recently one radio was used in isolation and was usually connected to only one antenna. The situation today is very different: there is usually more than one radio used at once for example a handset may have 4 cellular bands, GPS and Bluetooth. Sometimes WLAN radios are also present. This means that more RF filtering of signals is necessary. It is also becoming common for each radio to use more than one antenna in order to create diversity or for MIMO applications. MIMO makes use of multipath in order to improve the signal quality and reliability. A MIMO system generally uses more than two antennas or multiples of 2 can be a more powerful technique than diversity switching for improving a communications link [11]. As shown in the block diagram the back end modules such as network switch, front camera and back end camera captures the required data and will send simultaneously to the human or computer system through the connected network. MIMO can be incorporated to support the UGV by providing required data rates.

DESIGN OF A MIMO MODEL FOR UNMANNED GROUND VEHICLE:

The long term evolution is the term given to 4G mobile communication networks where the data rates are guaranteed one. Multi input Multi output is one of the technologies used to improve system reliability and data transmission speed.

The MIMO based array model gives the significant isolation between patch elements with little bit variations in input ports and port placements.

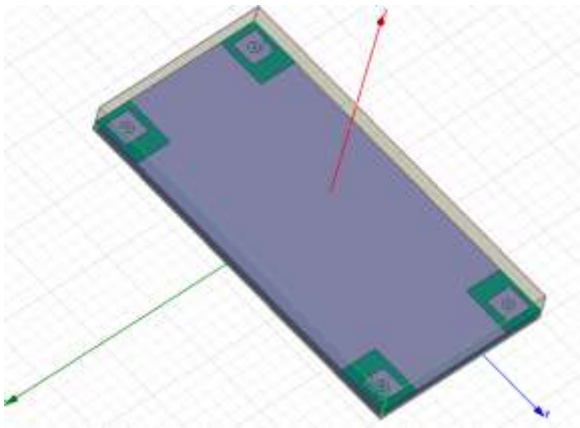

Fig 1.2 Configuration of MIMO array for UGV

Beam forming concept increases cell range and coverage by concentrating on radiated energy [12], within a narrow beam and directing it towards the user but not the entire cell.

RESULTS:

The considerable amount of data rates is achieved using the designed MIMO patch where the signal to noise ratio is between 12-dBm to 20 dBm which is a desirable SNR ratio.

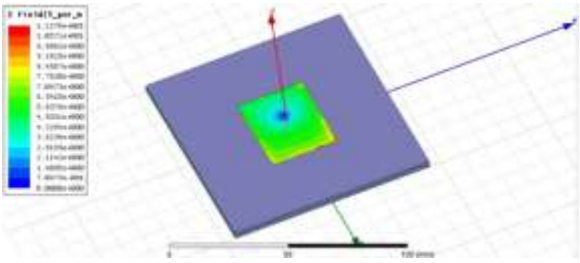

Fig 1.3 Radiation area which the maximum radiation is achieved

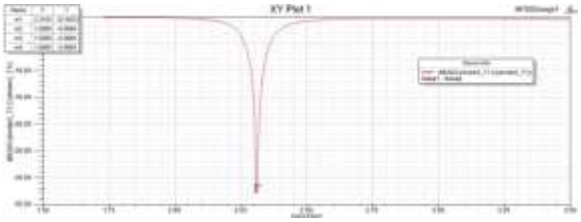

Fig 1.4 Desired frequency

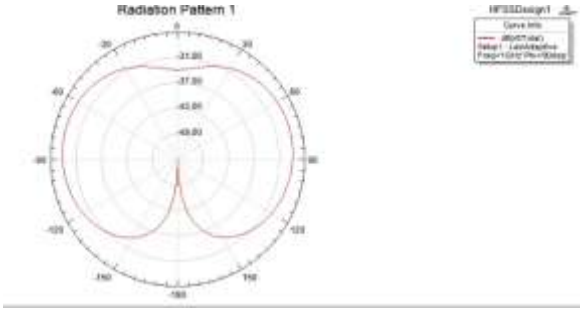

Fig 1.5 Radiation pattern

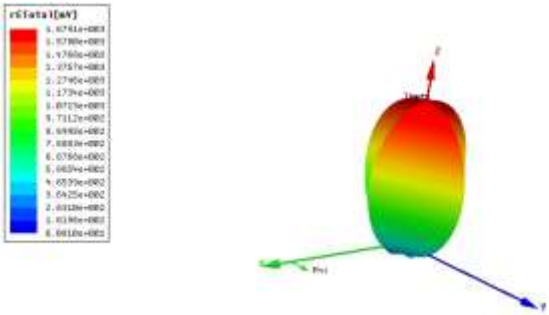

Fig 1.6 3D radiation pattern

CONCLUSION:

HFSS software has been used to design a MIMO patch model; the significant amount of frequency is achieved, where the patch antennas exhibit large electromagnetic signatures at certain frequencies outside the operating band. Therefore the work can be enhanced and in future we can implement the MIMO design to fields concentrating on military and unmanned vehicles.

REFERNCES:

[1] J. Casper and R.R. Murphy, "Human-robot interactions during the robot-assisted urban search and rescue response at the world trade center", Systems, Man, and Cybernetics, Part B, IEEE Transations on, vol. 33, no. 3, pp. 367-385, June 2003.

[2] A. Mohebbi, S. Safaee, M. Keshmiri and S. Mohebbi, “Design, Simulation and Manufacturing of a Tracked

Surveillance Unmanned Ground Vehicle", Proceedings of the IEEE International Conference on Robotics and Biomimetices, (2010) December 14-18; Montreal, Canada.

[3] A. Cadena, "Development of a low cost Autonomous Underwater Vehicle for Antarctic exploration", Proceedings of the IEEE Conference on Technologies for Practical Robot Applications, (2011) April 11-12; Guayaquil, Ecuador.

[4] G. Zhang, C. Duncan, J. Kanno and R. Selmic, "Unmanned Ground Vehicle Navigation in Coordinate-Free and Localization-Free Wireless Sensor and Acutuator Networks", Proceedings of the IEEE International Conference on Control Applications, (2010) Sept. 8-10; LA, USA.

[5] [5.] J. Gong, Y. Duan, K. Liu, Y. Chen, G. Xiong and H. Chen, "A Robust Multistrategy Unmanned Ground Vehicle Navigation method using Laser Rader", Proceedings of the IEEE International Symposium on Intelligent Vehicles, (2009) June 3-5; Beijing, China.

[6] [6.] Bradley J. Betts, Robert W. Mah, Richard Papasin, Rommel Del Mundo, Dawn M. McIntosh, and Charles Jorgensen, "Improving situational awareness for first responders via mobile computing", Technical memorandum, NASA Ames Research Center, Moffett Field, CA 94035-1000, March 2005.

[7] [7.] P. T. M. Saito, R. J. Sabatine, D. F. Wolf and K. R. L. J. C. Branco, "An Analysis of Parallel Approaches for a Mobile Robotic Self-localization Algorithm", International Journal of Future Generation Communication and Networking, (2009)

[8] [8.] J. Casper and R.R. Murphy, "Human-robot interactions during the robot-assisted urban search and rescue response at the world trade center", Systems, Man, and Cybernetics, Part B, IEEE Transactions on, vol. 33, no. 3, pp. 367-385, June 2003.

[9] [9.] Thomas Wisspeintner, Walter Nowak, and Ansgar redenfeld,RoboCup 2005: Robot Soccer World Cup IX, vol. 4020, chapter VolksBot - A Flexible Component-Based Mobile Robot System, pp. 716-723, Springer Berlin Heidelberg, 2006.

[10] [10.] M. Yagimli and H. S. Varol, "Mine Detecting GPS-Based Unmanned Ground Vehicle", Proceedings of the International Conference on Recent Advances in Space Technologies, (2009) June 11-13; Istanbul, Turkey.

[11] [11.] A. Bouhraoua, N. Merah, M. AlDajani and M. ElShafei, "Design and Implementation of an Unmanned Ground Vehicle for Security Applications", Proceedings of the 7th International Symposium on Mechatronics and its Applications, (2010) April 20-22; Dhahran, Saudi Arabia.

[12] [12.] Technology Development for Army Unmanned Ground Vehicles, Committee on Army Unmanned Ground Vehicle Technology, Board on Army Science and Technology, Division on Engineering and Physical Sciences/National Research Council, Washington DC, 2002, pages 2-8